©1981 TECHLIT CO.
Printed in U.S.A.

INSTRUCTION SHEET
OFF VEHICLE CARBURETOR SERVICE
HOLLEY MODEL - 1940

IS- 50-540-2

GENERAL EXPLODED VIEW

THE GENERAL DESIGN AND PARTS SHOWN WILL VARY TO INDIVIDUAL UNITS COVERED ON THIS INSTRUCTION SHEET.

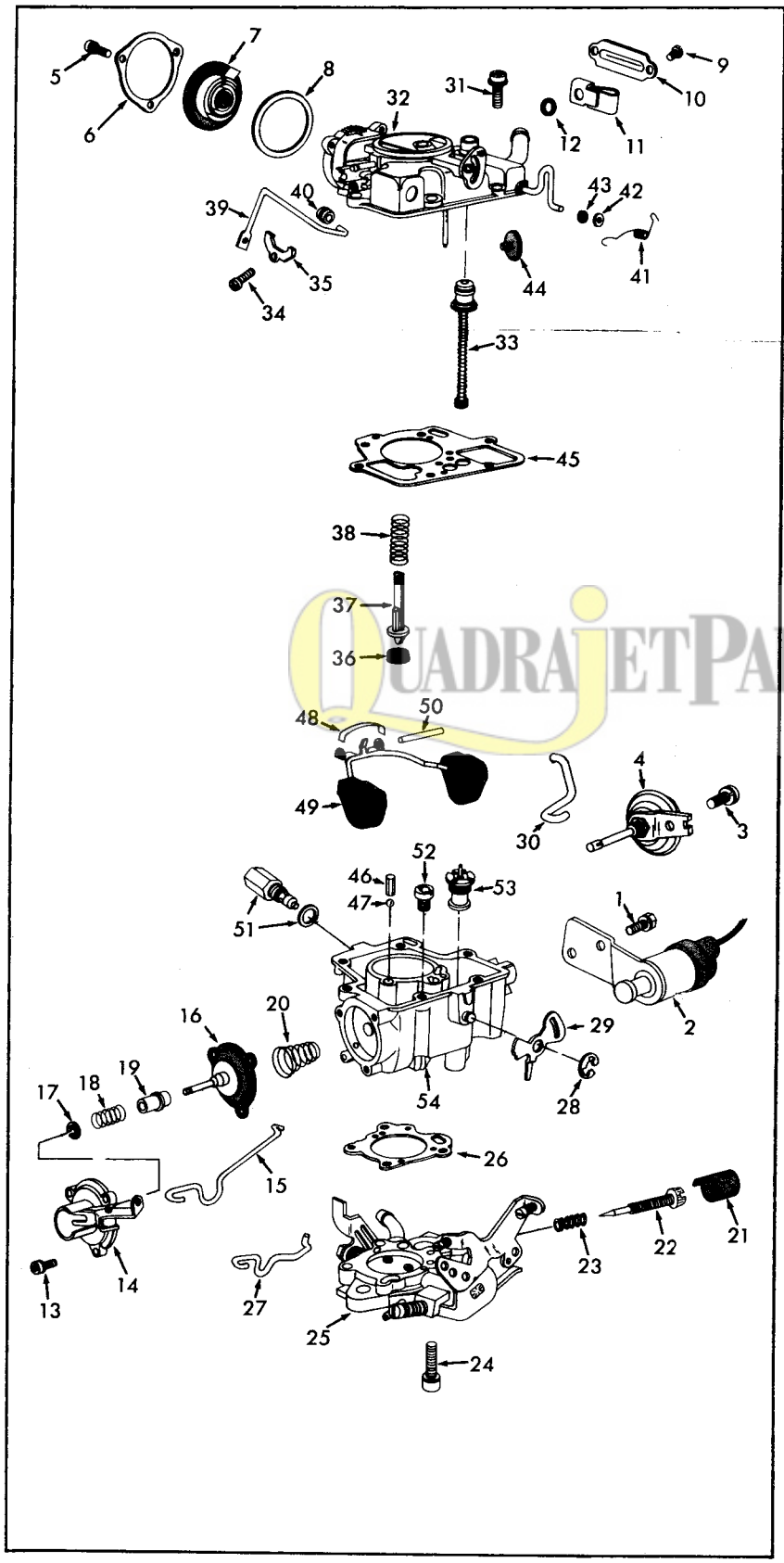

DISASSEMBLY

USE EXPLODED VIEW AS A GUIDE. THE NUMERICAL SEQUENCE MAY GENERALLY BE FOLLOWED TO DISASSEMBLE UNIT FAR ENOUGH TO PERMIT CLEANING AND INSPECTION. **CAUTION:** MAIN WELL TUBE IS NOT REMOVABLE. TAKE EXTREME CARE SO AS NOT TO BEND OR DAMAGE TUBE. REMOVE STAKING FROM BOWL COVER FOR EASY REMOVAL OF POWER PISTON ASSY. (33). BEARING WASHER (42) AND FELT SEAL (43) CAN BE REMOVED. VENT VALVE ROD IS NOT REMOVABLE.

NOMENCLATURE

REF. NO.	REF. NO.
1. SCREW & LKWSHR. (2) - SOLENOID	28. E CLIP - FAST IDLE CAM
2. SOLENOID ASSY. - THROTTLE	29. CAM - FAST IDLE
3. SCREW & LKWSHR. - DASHPOT	30. LINK - FAST IDLE CAM
4. DASHPOT ASSY.	31. SCREW & LKWSHR (6) - BOWL COVER
5. SCREW (3) - CHOKE COVER RETAINER	32. BOWL COVER ASSY.
6. RETAINER - CHOKE COVER	33. PISTON ASSY. - POWER VALVE
7. CHOKE COVER & SPRING ASSY.	34. SCREW - PUMP ROD CLAMP
8. GASKET - CHOKE COVER	35. CLAMP - PUMP ROD
9. SCREW & LKWSHR (2) - COVER	36. CUP - PUMP
10. COVER - IDLE COMP. VALVE	37. STEM - PUMP CAP
11. VALVE - IDLE COMPENSATOR	38. SPRING - PUMP
12. GASKET - IDLE COMP. VALVE	39. ROD - PUMP
13. SCREW & LKWSHR (3) - COVER	40. GROMMET - PUMP ROD
14. COVER ASSY. - CHOKE DIAPHRAGM	41. SPRING - VENT ROD
15. LINK - CHOKE DIAPHRAGM LEVER	42. BEARING - VENT ROD
16. DIAPHRAGM ASSY. - CHOKE	43. SEAL (FELT) - VENT ROD
17. RETAINER - MODULATOR SPRING	44. VALVE - VENT
18. SPRING - CHOKE MODULATOR	45. GASKET - BOWL COVER
19. SLEEVE - CHOKE MODULATOR	46. WEIGHT - PUMP DISC. BALL
20. SPRING - DIAPHRAGM RETURN	47. BALL - PUMP DISC.
21. CAP - IDLE LIMITER	48. RETAINER - FLOAT PIN
22. NEEDLE - IDLE ADJUSTING	49. FLOAT ASSY.
23. SPRING - IDLE ADJ. NEEDLE	50. PIN - FLOAT HINGE
24. SCREW & LKWSHR (3) - THROTTLE BODY	51. NEEDLE, SEAT & GASKET ASSY.
25. THROTTLE BODY ASSY.	52. JET - MAIN
26. GASKET - THROTTLE BODY	53. POWER VALVE ASSY.
27. LINK - PUMP OPERATING	54. BOWL ASSY. - FLOAT

CLEANING

CLEANING MUST BE DONE WITH CARBURETOR DISASSEMBLED. SOAK PARTS LONG ENOUGH TO SOFTEN AND REMOVE ALL FOREIGN MATERIAL. USE A CARBURETOR CLEANING SOLVENT. MAKE CERTAIN THE THROTTLE BORES ARE FREE OF ALL CARBON AND VARNISH DEPOSITS. RINSE OFF IN SUITABLE SOLVENT. BLOW OUT ALL PASSAGES IN CASTINGS WITH COMPRESSED AIR AND CHECK CAREFULLY TO INSURE THOROUGH CLEANING OF OBSCURE AREAS. **CAUTION:** DO NOT SOAK PLASTIC FLOAT, SOLENOIDS OR PARTS CONTAINING RUBBER MATERIALS IN CARBURETOR CLEANING SOLVENT.

REASSEMBLY

REASSEMBLE IN REVERSE ORDER OF DISASSEMBLY. NOTE SPECIAL INSTRUCTIONS AND FOLLOW NUMERICAL OUTLINE IN MAKING ADJUSTMENTS

SPECIAL INSTRUCTIONS

VENT ROD BEARING (42) - LIGHTLY STAKE CASTING AROUND BEARING WASHER.

POWER PISTON (33) - LIGHTLY STAKE CASTING AROUND WASHER.

PUMP OPERATING LINK (27) - INSTALL LINK IN NUMBER 2 SLOT OF THROTTLE LEVER.

THROTTLE BODY SCREWS (24) - TORQUE SCREWS TO 30 IN. LBS. IN THREE EVEN STEPS.

IDLE ADJ. NEEDLE (22) - TURN IN UNTIL SEATED, THEN BACK OUT 1 1/2 TURNS. (DO NOT INSTALL LIMITER CAP AT THIS TIME.)

QUADRAJETPARTS.com

ADJUSTMENTS

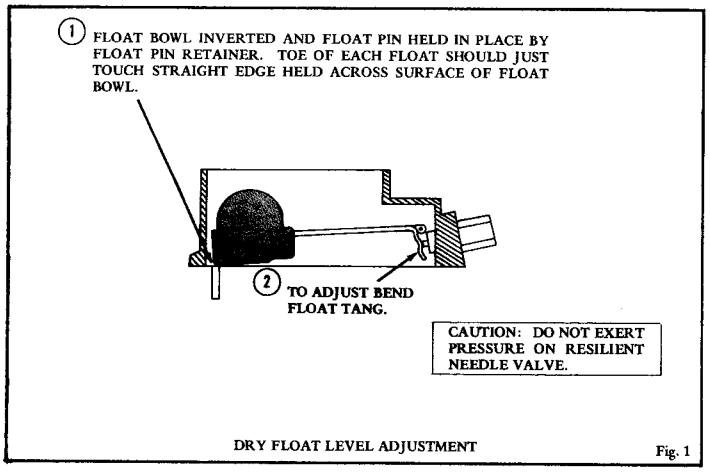

DRY FLOAT LEVEL ADJUSTMENT Fig. 1

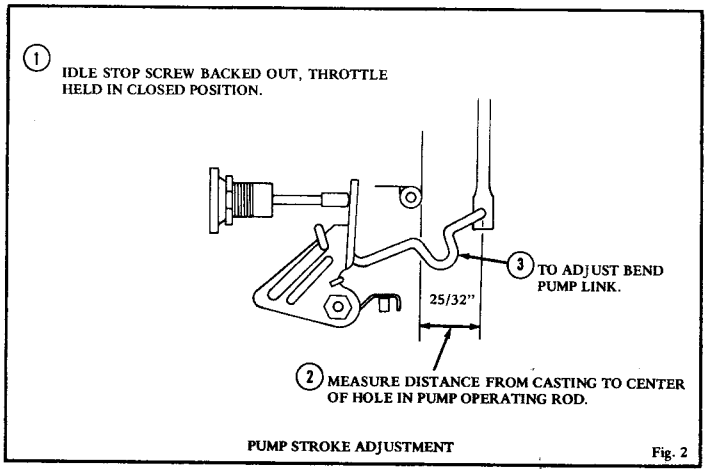

PUMP STROKE ADJUSTMENT Fig. 2

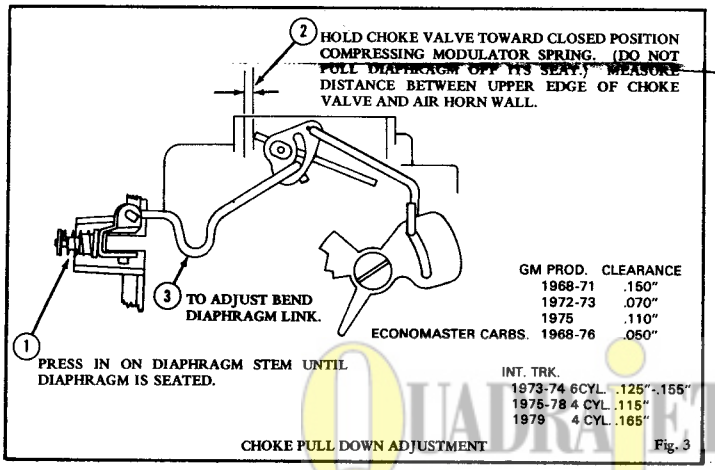

CHOKE PULL DOWN ADJUSTMENT Fig. 3

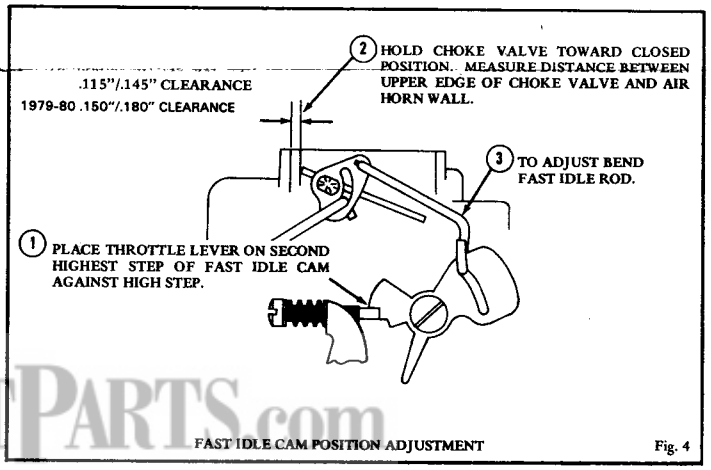

FAST IDLE CAM POSITION ADJUSTMENT Fig. 4

QUADRAJETPARTS.com

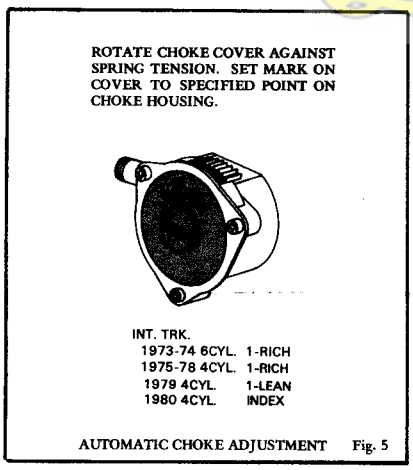

AUTOMATIC CHOKE ADJUSTMENT Fig. 5

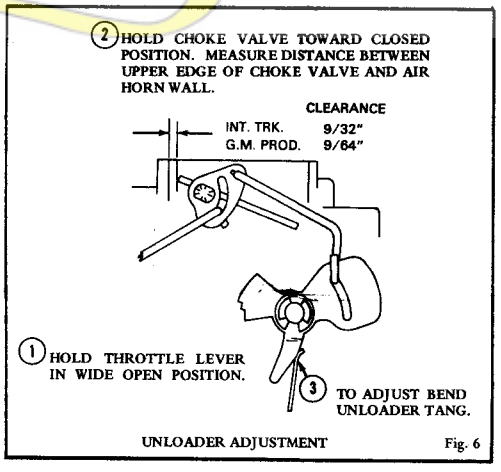

UNLOADER ADJUSTMENT Fig. 6

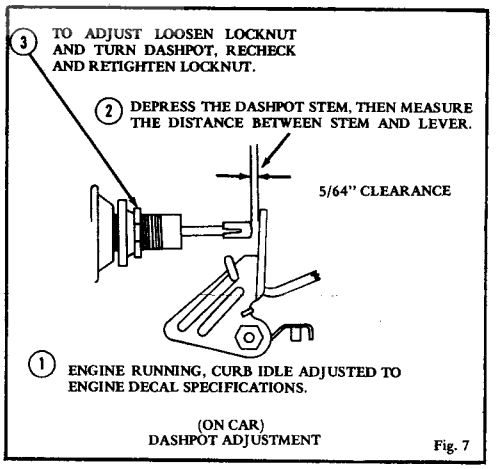

(ON CAR)
DASHPOT ADJUSTMENT Fig. 7

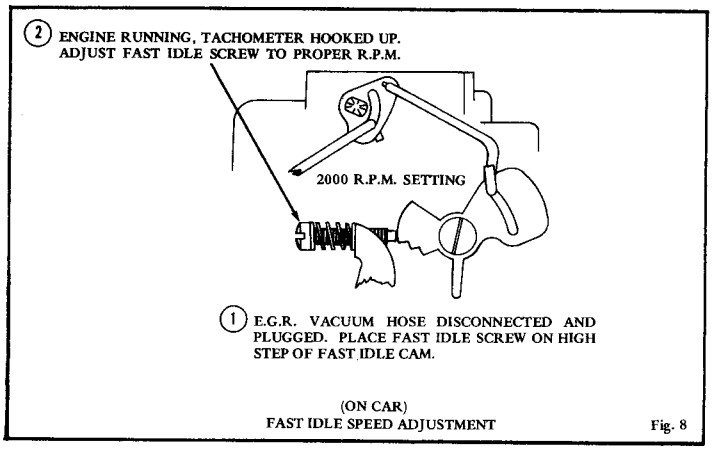

(ON CAR)
FAST IDLE SPEED ADJUSTMENT Fig. 8

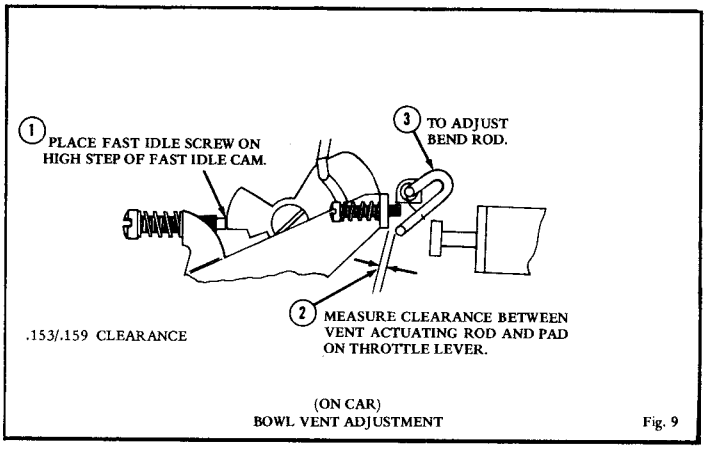

(ON CAR)
BOWL VENT ADJUSTMENT Fig. 9