1980 TECHLIT CO.
Printed in U.S.A.

INSTRUCTION SHEET
HOLLEY CARBURETOR—MODEL 1946

50-546-3

THE GENERAL DESIGN AND PARTS SHOWN WILL VARY TO INDIVIDUAL UNITS COVERED ON THIS INSTRUCTION SHEET.

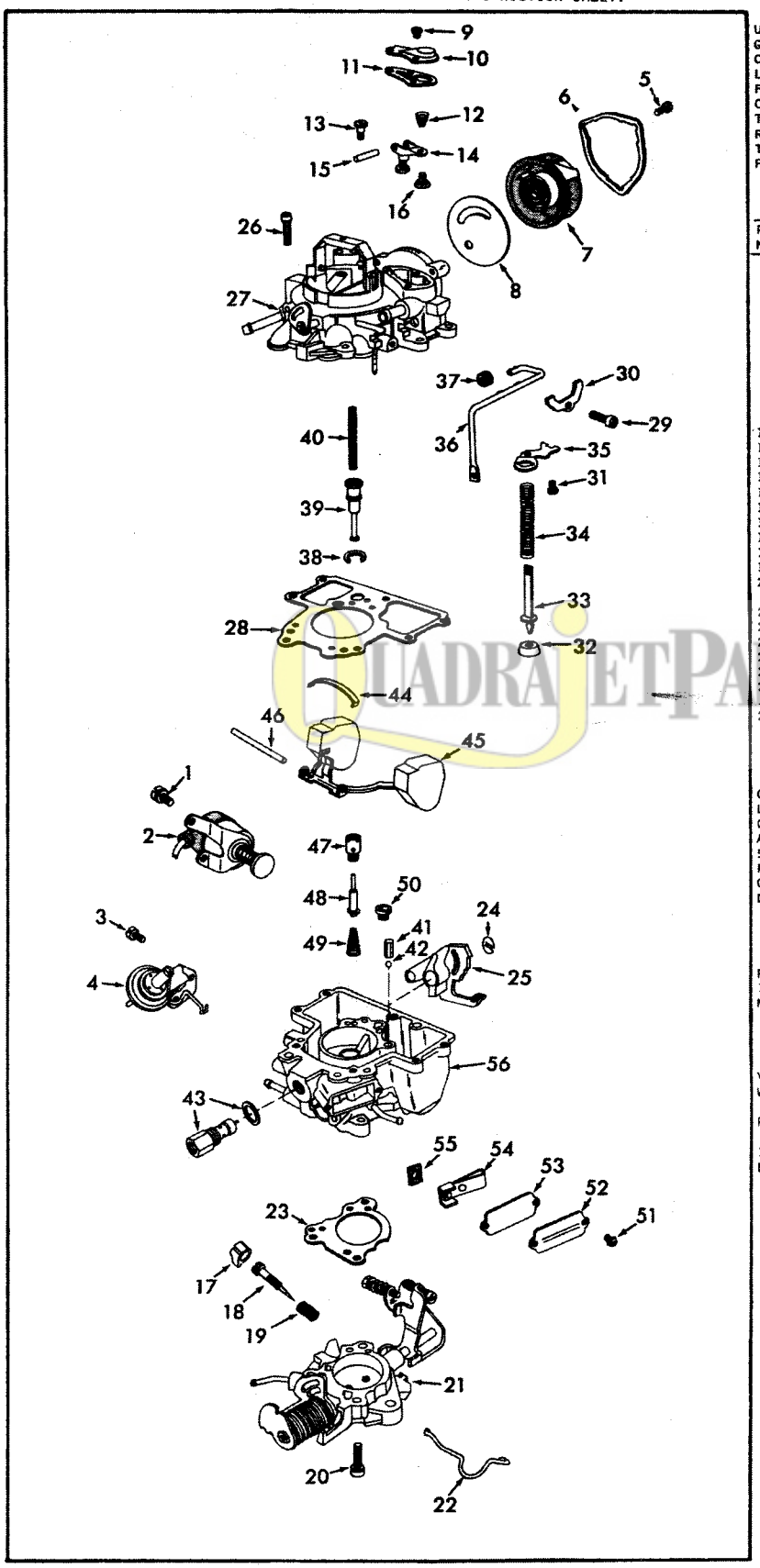

DISASSEMBLY

USE EXPLODED VIEW AS A GUIDE. THE NUMERICAL SEQUENCE MAY GENERALLY BE FOLLOWED TO DISASSEMBLE UNIT FAR ENOUGH TO PERMIT CLEANING AND INSPECTION. CAUTION: BEFORE REMOVING IDLE LIMITER CAP, TURN CAP TO THE LEANEST POSITION, REMOVE CAP FROM THIS POSITION, THEN TURN IDLE ADJUSTING NEEDLE (18) IN, COUNTING THE NUMBER OF TURNS IT TAKES TO BE LIGHTLY SEATED. THEN REMOVE NEEDLE AND SPRING. MAIN WELL TUBE IS NOT REMOVABLE. TAKE EXTREME CARE SO AS NOT TO BEND OR DAMAGE TUBE. REMOVE STAKING FROM BOWL COVER FOR EASY REMOVAL OF POWER PISTON RETAINING WASHER (38).

NOMENCLATURE

REF. NO.		REF. NO.	
1.	SCREW & LOCKWASHER (2)-SOLENOID	28.	GASKET-BOWL COVER
2.	SOLENOID ASSY.-ANTI-DIESEL	29.	SCREW-PUMP ROD CLAMP
3.	SCREW (2)-CHOKE PULLDOWN ASSY.	30.	CLAMP-PUMP ROD
4.	CHOKE PULLDOWN & LINK ASSY.	31.	SCREW & LOCKWASHER-SPRING RETAINING PLATE
5.	SCREW (3)-CHOKE RETAINER	32.	CUP-PUMP
6.	RETAINER-CHOKE COIL HOUSING	33.	STEM-PUMP
7.	ELECTRIC CHOKE COIL ASSY.	34.	SPRING-PUMP
8.	GASKET-CHOKE COIL ASSY.	35.	PLATE-PUMP SPRING RETAINING
9.	SCREW (3)-VENT VALVE COVER	36.	ROD-PUMP OPERATING
10.	COVER-VENT VALVE	37.	GROMMET-PUMP ROD
11.	GASKET-VENT VALVE COVER	38.	RETAINER-VACUUM PISTON
12.	SPRING-VENT VALVE	39.	PISTON-POWER
13.	SCREW-LEVER PIN	40.	SPRING-POWER PISTON
14.	LEVER-VENT VALVE	41.	WEIGHT-PUMP DISC. BALL
15.	PIN-LEVER	42.	BALL-PUMP DISC.
16.	VALVE-VENT	43.	NEEDLE, SEAT & GASKET ASSY.
17.	CAP-IDLE LIMITER	44.	RETAINER-FLOAT PIN
18.	NEEDLE-IDLE ADJUSTING	45.	FLOAT ASSY.
19.	SPRING-IDLE ADJ. NEEDLE	46.	PIN-FLOAT HINGE
20.	SCREW & LOCKWASHER (3)-THROTTLE BODY	47.	JET-POWER VALVE
21.	THROTTLE BODY ASSY.	48.	STEM-POWER VALVE
22.	LINK-PUMP OPERATING	49.	SPRING-POWER VALVE
23.	GASKET-THROTTLE BODY	50.	JET-MAIN
24.	RETAINER-FAST IDLE CAM	51.	SCREW & LOCKWASHER (2)-COVER
25.	CAM-FAST IDLE	52.	COVER-HOT IDLE COMPENSATOR
26.	SCREW & LOCKWASHER (7)-BOWL COVER	53.	GASKET-COVER
27.	BOWL COVER ASSY.	54.	COMPENSATOR-HOT IDLE
		55.	GASKET-COMPENSATOR
		56.	BOWL ASSY.

CLEANING

CLEANING MUST BE DONE WITH CARBURETOR DISASSEMBLED. SOAK PARTS LONG ENOUGH TO SOFTEN AND REMOVE ALL FOREIGN MATERIAL. USE A CARBURETOR CLEANING SOLVENT. MAKE CERTAIN THE THROTTLE BORES ARE FREE OF ALL CARBON AND VARNISH DEPOSITS. RINSE OFF IN SUITABLE SOLVENT. BLOW OUT ALL PASSAGES IN CASTINGS WITH COMPRESSED AIR AND CHECK CAREFULLY TO INSURE THOROUGH CLEANING OF OBSCURE AREAS. CAUTION: DO NOT SOAK PLASTIC FLOAT, SOLENOID, DIAPHRAGM ASSY., OR RUBBER PARTS IN CLEANING SOLVENT.

REASSEMBLY

REASSEMBLE IN REVERSE ORDER OF DISASSEMBLY. NOTE SPECIAL INSTRUCTIONS AND FOLLOW NUMERICAL OUTLINE IN MAKING ADJUSTMENTS NECESSARY FOR CARBURETOR BEING SERVICED.

SPECIAL INSTRUCTIONS

VACUUM PISTON RETAINER (38) - LIGHTLY STAKE CASTING AROUND WASHER.

PUMP SPRING (34) - INSTALL WITH SMALL END TOWARDS PUMP CUP.

IDLE ADJ. NEEDLE (18) - TURN IN UNTIL LIGHTLY SEATED, THEN BACK OUT NUMBER OF TURNS RECORDED ON DISASSEMBLY.

QUADRAJETPARTS.com

ADJUSTMENTS

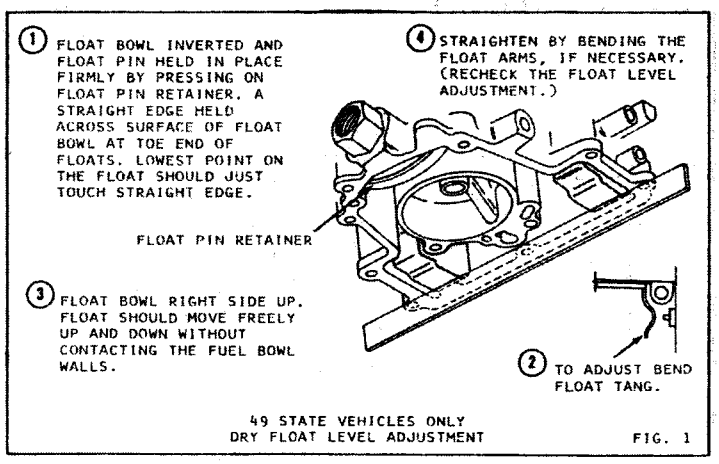

49 STATE VEHICLES ONLY
DRY FLOAT LEVEL ADJUSTMENT FIG. 1

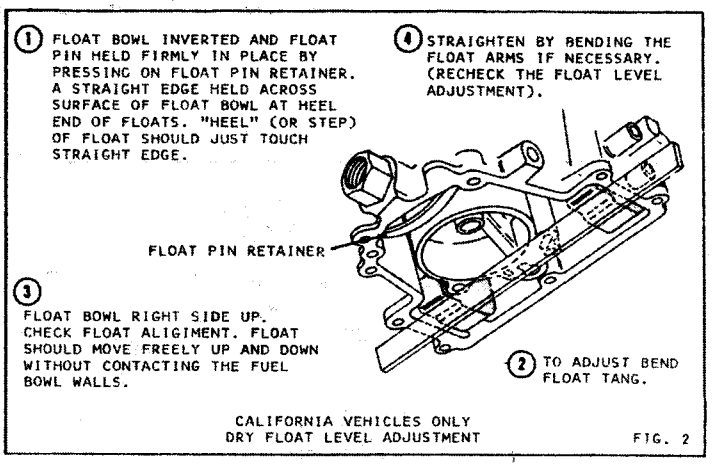

CALIFORNIA VEHICLES ONLY
DRY FLOAT LEVEL ADJUSTMENT FIG. 2

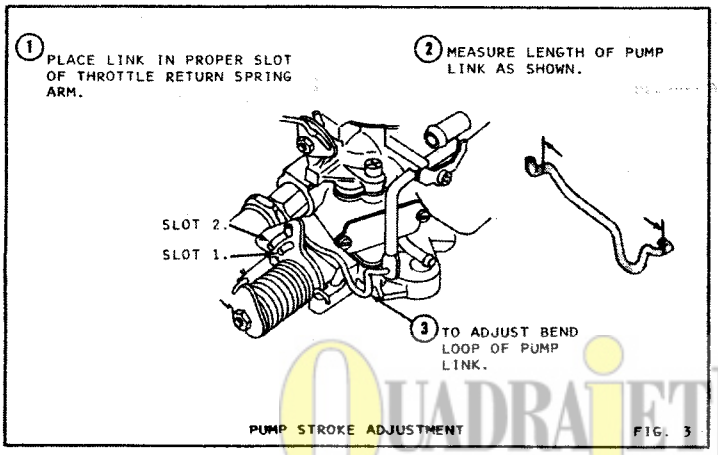

PUMP STROKE ADJUSTMENT FIG. 3

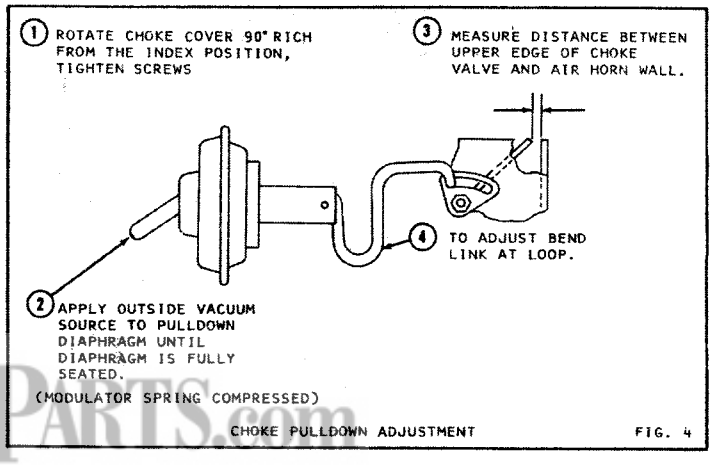

CHOKE PULLDOWN ADJUSTMENT FIG. 4

QUADRAJETPARTS.com

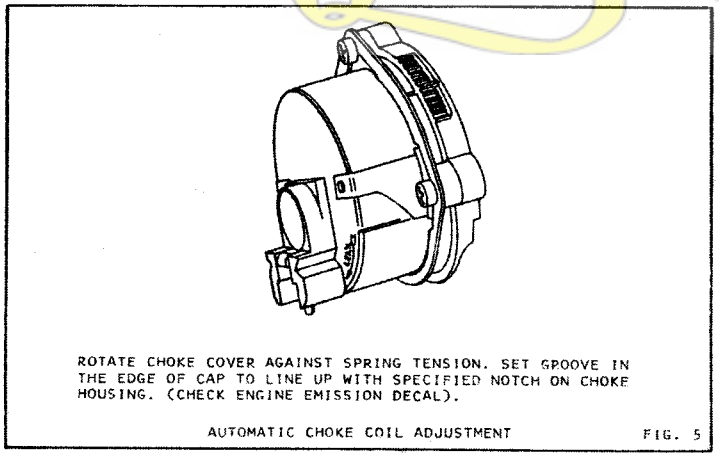

ROTATE CHOKE COVER AGAINST SPRING TENSION. SET GROOVE IN THE EDGE OF CAP TO LINE UP WITH SPECIFIED NOTCH ON CHOKE HOUSING. (CHECK ENGINE EMISSION DECAL).

AUTOMATIC CHOKE COIL ADJUSTMENT FIG. 5

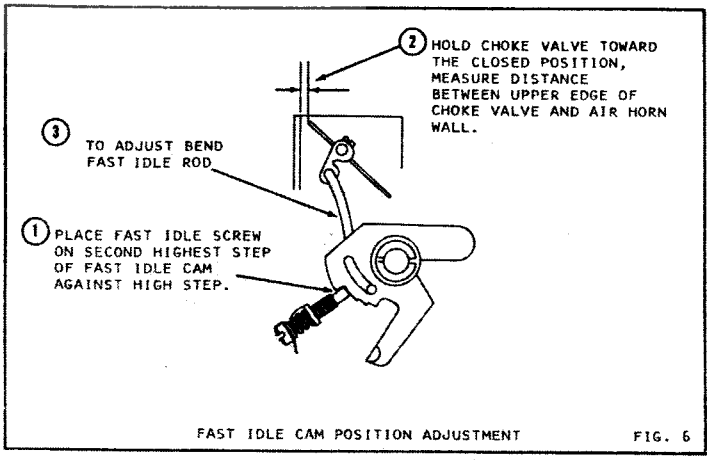

FAST IDLE CAM POSITION ADJUSTMENT FIG. 6

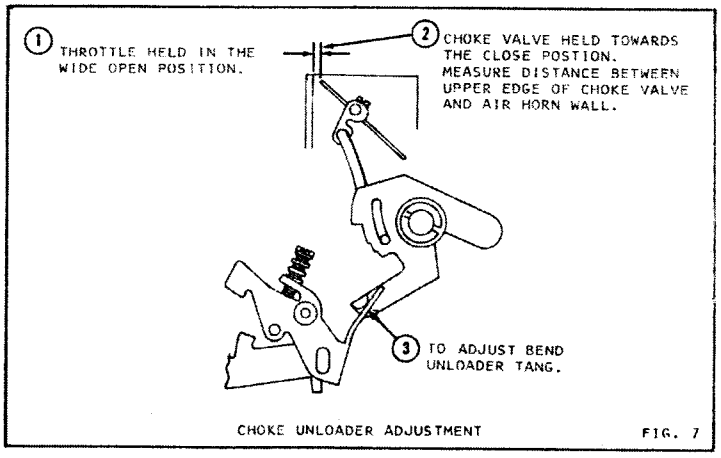

CHOKE UNLOADER ADJUSTMENT FIG. 7

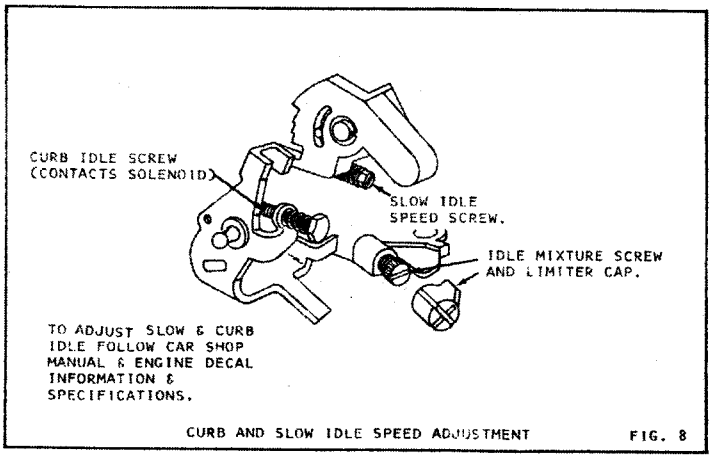

CURB AND SLOW IDLE SPEED ADJUSTMENT FIG. 8

ADJUSTMENTS

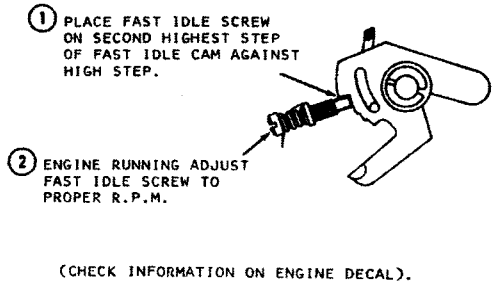

FAST IDLE ADJUSTMENT FIG. 9

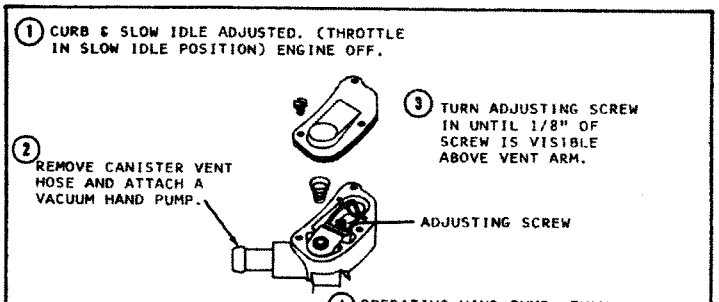

ON CAR
EXTERNAL BOWL VENT ADJUSTMENT FIG. 10

ADJUSTMENT DATA TABLE

Year	Application	Dry Float Level	Pump Adj. Slot	Pump Adj. Rod Length	Choke Pulldown Setting	*Auto Choke Setting	Fast Idle Cam Setting	Choke Unloader Setting
1978	Fairmont/Zephyr 200" Eng.							
	Federal	Fig. 1	2	2 5/32"	.110	INDEX	.090	.150
	Calif.	Fig. 2	2	2 5/32"	.150	INDEX	.130	.150
1979	Fairmont/Zephyr 200" Eng.							
	Federal	Fig. 1	2	2 1/4"	.080	INDEX	.055	.150
	Calif.	Fig. 2	2	2 5/16"	.150	INDEX	.130	.150
1980	200" Eng. Fed. A/T Carb. No. EOZE-DA, EA	Fig. 1	2	2 5/32"	.110	2-RICH	.070	.150
	CARB. NO. EOBE-AA, CA	Fig. 1	2	2 5/32"	.100	2-RICH	.070	.150
1981	200" Eng. CANADA Carb. No. EOBE-AA, CA	Fig. 1	2	2 5/32"	.100	2-RICH	.070	.150

QUADRAJETPARTS.com

Federal =ALL STATES EXCEPT CALIFORNIA
***Check Engine Emission Decal**

THE INFORMATION AND SPECIFICATIONS CONTAINED HEREIN ARE BASED ON LATEST PRODUCT INFORMATION AVAILABLE AT THE TIME OF PUBLICATION. THE RIGHT IS RESERVED TO MAKE CHANGES AT ANY TIME WITHOUT NOTICE.

PLEASE REFER TO THE ENGINE DECAL, SERVICE SPECIFICATIONS AND TECHNICAL BULLETINS FOR REVISIONS TO THIS INFORMATION.