INSTRUCTION SHEET
Holley Model 847

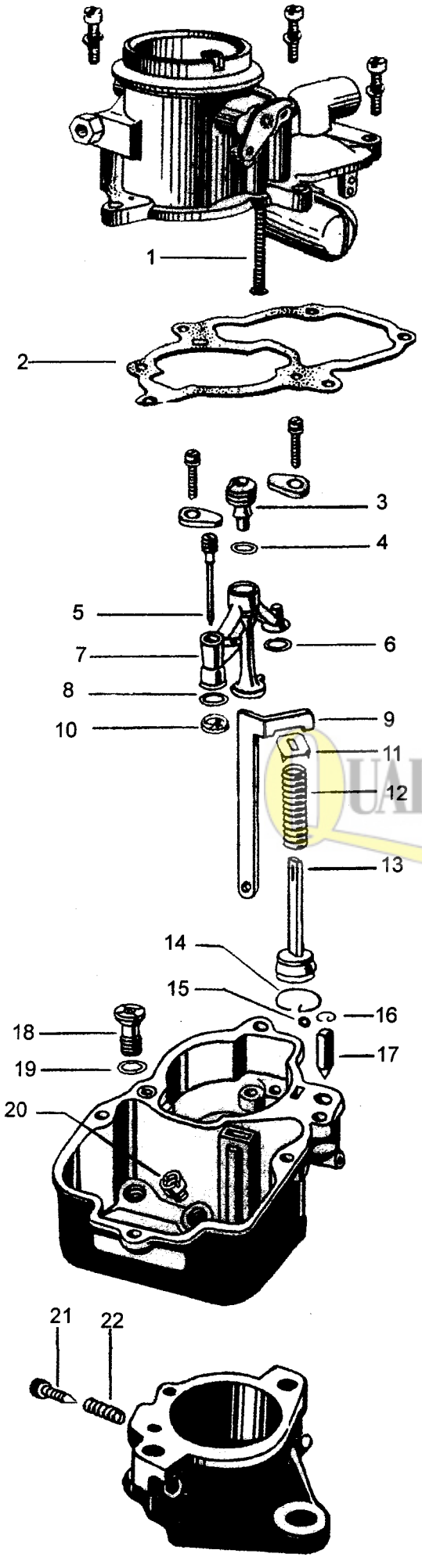

CLEANING

Cleaning should be done with carburetor disassembled. Soak parts long enough to soften and remove all foreign material. Use a cleaning solvent and remove hard carbon deposits. Rinse with clean solvent and blow all passages with compressed air. Reassemble in reverse order of disassembly. When cleaning with solvent do not soak or spray rubber, plastic or electrical components. The pump assembly must be flared then soaked in clean oil for several minutes before installation. Note: The exploded view is typical and may differ slightly from carburetor being serviced and does not reflect contents of kit.

FLOAT ADJUSTMENT

1. Invert air horn and remove gasket, allow float to hang freely.
2. Use 3/16 gage pin or drill bit, to set from casting to top of float.
3. To adjust bend at float lever

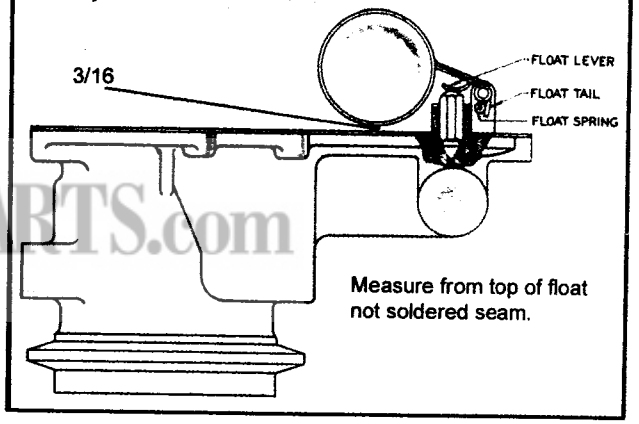

QUADRAJETPARTS.com

IDLE ADJUSTMENT

Turn in idle adjusting screw until lightly seated. Then open adjusting screw 1 turn ± ½ turn. Note: engine speed should not idle below 425 -450 RPM with manual transmission in neutral and automatic transmission in drive.

NOMENCLATURE

1. Power Piston assy.	12. Return Spring, Pump
2. Bowl Gasket	13. Pump assy.
3. Nozzle Plug	14. Retainer, Check Ball
4. Nozzle Plug Washer	15. Check Ball
5. Idle Tube	16. Retainer, Needle
6. Nozzle Bar Gasket	17. Needle Valve
7. Nozzle Bar assy.	18. Power Valve
8. Nozzle Bar Gasket	19. Gasket, Power Valve
9. Pump Operating Rod	20. Main Jet
10. Nozzle Bar Screen	21. Idle Screw
11. Retainer, Spring	22. Idle Screw Spring