©1982 TECHLIT CO.
Printed in U.S.A.

INSTRUCTION SHEET

50-301

HOLLEY CARBURETOR - MODEL 2300

SHOWING THE LATE DESIGN SAFETY SEAL ADJUSTABLE NEEDLE AND SEAT ASSEMBLY

DISASSEMBLY

1. USE EXPLODED VIEW ON OPPOSITE SIDE OF THIS SHEET AS A GUIDE. THE NUMERICAL SEQUENCE MAY GENERALLY BE FOLLOWED TO DISASSEMBLE UNIT FAR ENOUGH TO PERMIT CLEANING AND INSPECTION.

CLEANING

2. SOAK PARTS LONG ENOUGH TO SOFTEN AND REMOVE ALL FOREIGN MATERIAL. USE (1) A CARBURETOR CLEANING SOLVENT (2) LACQUER THINNER OR (3) DENATURED ALCOHOL. MAKE CERTAIN THE THROTTLE BODY IS FREE OF ALL HARD CARBON DEPOSITS. RINSE OFF IN SUITABLE SOLVENT AND BLOW OUT ALL PASSAGES IN CASTING WITH COMPRESSED AIR AND CHECK CAREFULLY TO INSURE THOROUGH CLEANING OF OBSCURE AREAS CAUTION: DO NOT SOAK RUBBER, LEATHER OR PLASTIC PARTS IN SOLVENT.

REASSEMBLY

3. REASSEMBLE THE CARBURETOR USING THE REVERSE ORDER OF DISASSEMBLY. NOTE: WHEN INSTALLING IDLE ADJUSTING NEEDLES (15), RUN THEM DOWN UNTIL THEY SEAT LIGHTLY, THEN BACK THEM OUT ONE TURN.
AFTER INSTALLING THE FLOAT, POSITION THE FUEL BOWL UPSIDE DOWN AND ADJUST THE FLOAT AS OUTLINED IN STEP 1 OF FLOAT LEVEL ADJUSTMENT.

ADJUSTMENTS

1. FLOAT LEVEL. SEE FIG.1. STEP 1. WITH FUEL BOWL IN AN INVERTED POSITION, TURN THE ADJUSTING SCREW SLOT UNTIL THE TOP OF THE FLOAT IS PARALLEL WITH THE TOP OF THE FUEL BOWL. TIGHTEN LOCKNUT SNUGLY.
STEP 2. WITH CAR ON A LEVEL FLOOR, BRING ENGINE TO NORMAL OPERATING TEMPERATURE, REMOVE PLUG FROM SIDE OF BOWL AND ADJUST RUNNING FUEL LEVEL TO BE AT LOWER EDGE OF INSPECTION HOLE. TIGHTEN LOCKNUT AND REPLACE SIGHT PLUG.

2. PUMP ADJUSTMENT. (A) WITH PUMP CAM (SEE FIG. 4) IN NO. 1 POSITION (62-64 RAMBLER AND WILLYS NO. 2 POSITION) (B) (SEE FIG. 2). THROTTLE HELD IN WIDE OPEN POSITION AND THE PUMP OPERATING ARM HELD IN A FULLY COMPRESSED POSITION, CHECK THE CLEARANCE BETWEEN THE ADJUSTING NUT AND THE PUMP OPERATING ARM. THE CLEARANCE SHOULD BE .015. TO ADJUST, TURN SCREW.

3. BOWL VENT ADJUSTMENT: WITH THROTTLE VALVE FULLY CLOSED, DISTANCE BETWEEN TOP OF FUEL BOWL AND VENT BUTTON SHOULD BE 1/16". TO ADJUST, BEND VENT ARM AT ACCELERATING PUMP LEVER. CAUTION: FORD AND MERCURY NO ADJUSTMENT REQUIRED. (SEE FIG. 3).

4. AUTOMATIC CHOKE SETTING: ALIGN MARK ON STAT COIL WITH INDEX ON CHOKE HOUSING, ALLOWABLE VARIATIONS, 2 MARKS EITHER WAY FROM INDEX.

5. SLOW IDLE ADJUSTMENT: ENGINE AT OPERATING TEMP., AND CHOKE WIDE OPEN, ADJUST IDLE MIXTURE NEEDLES (15) TO A SMOOTH IDLE. ADJUST IDLE STOP SCREW TO 500-550 R.P.M. (SEE FIG. 4).

6. FAST IDLE ADJUSTMENT: PLACE FAST IDLE SCREW ON HIGH STEP OF FAST IDLE CAM AND SET TO 1600-1700 R.P.M. (SEE FIG. 5).

7. DASHPOT ADJUSTMENT: THIS ADJUSTMENT IS MADE WITH CARBURETOR SET AT PROPER IDLE SPEED. DEPRESS DASHPOT PLUNGER FULLY. THE DISTANCE BETWEEN THE PLUNGER AND THROTTLE LEVER SHOULD BE 5/64". TO ADJUST, LOOSEN LOCKNUT AND ROTATE DASHPOT ASSEMBLY. RETIGHTEN LOCKNUT. (SEE FIG. 3).

CARBURETTPARTS.com

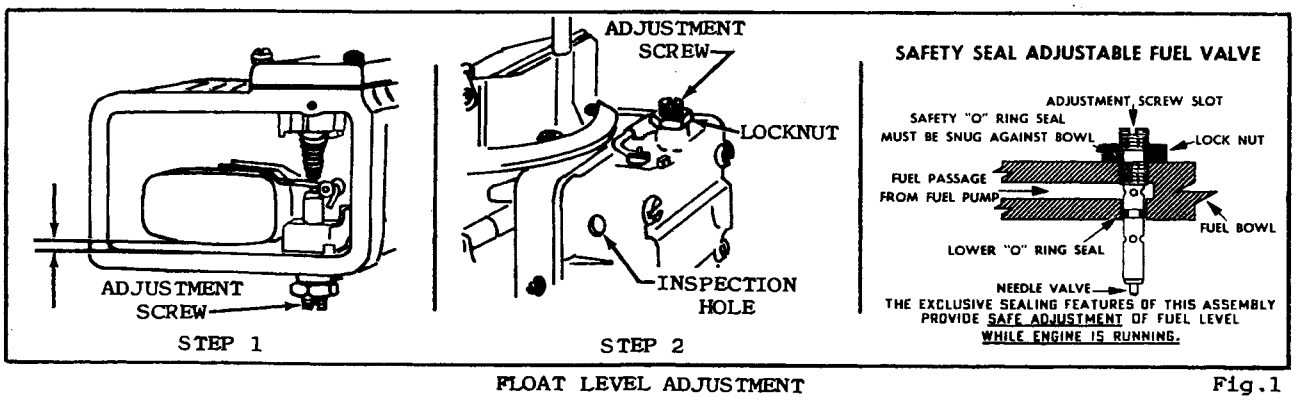

FLOAT LEVEL ADJUSTMENT Fig.1

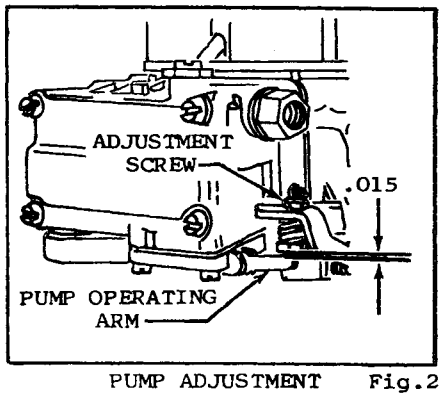

PUMP ADJUSTMENT Fig.2

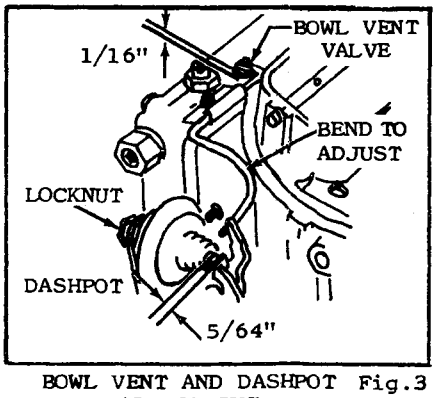

BOWL VENT AND DASHPOT ADJUSTMENT Fig.3

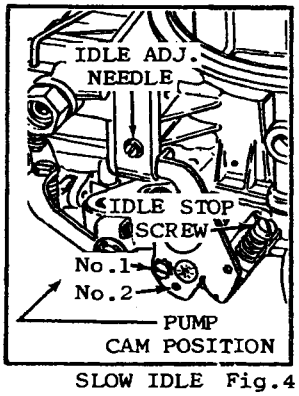

SLOW IDLE ADJUSTMENT Fig.4

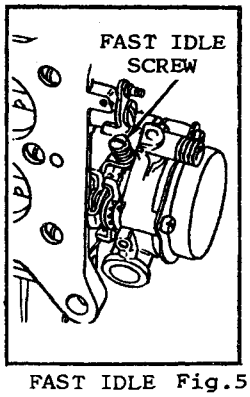

FAST IDLE ADJUSTMENT Fig.5

GENERAL EXPLODED VIEW

THE GENERAL DESIGN AND PARTS SHOWN WILL VARY TO INDIVIDUAL UNITS COVERED ON THIS INSTRUCTION SHEET.

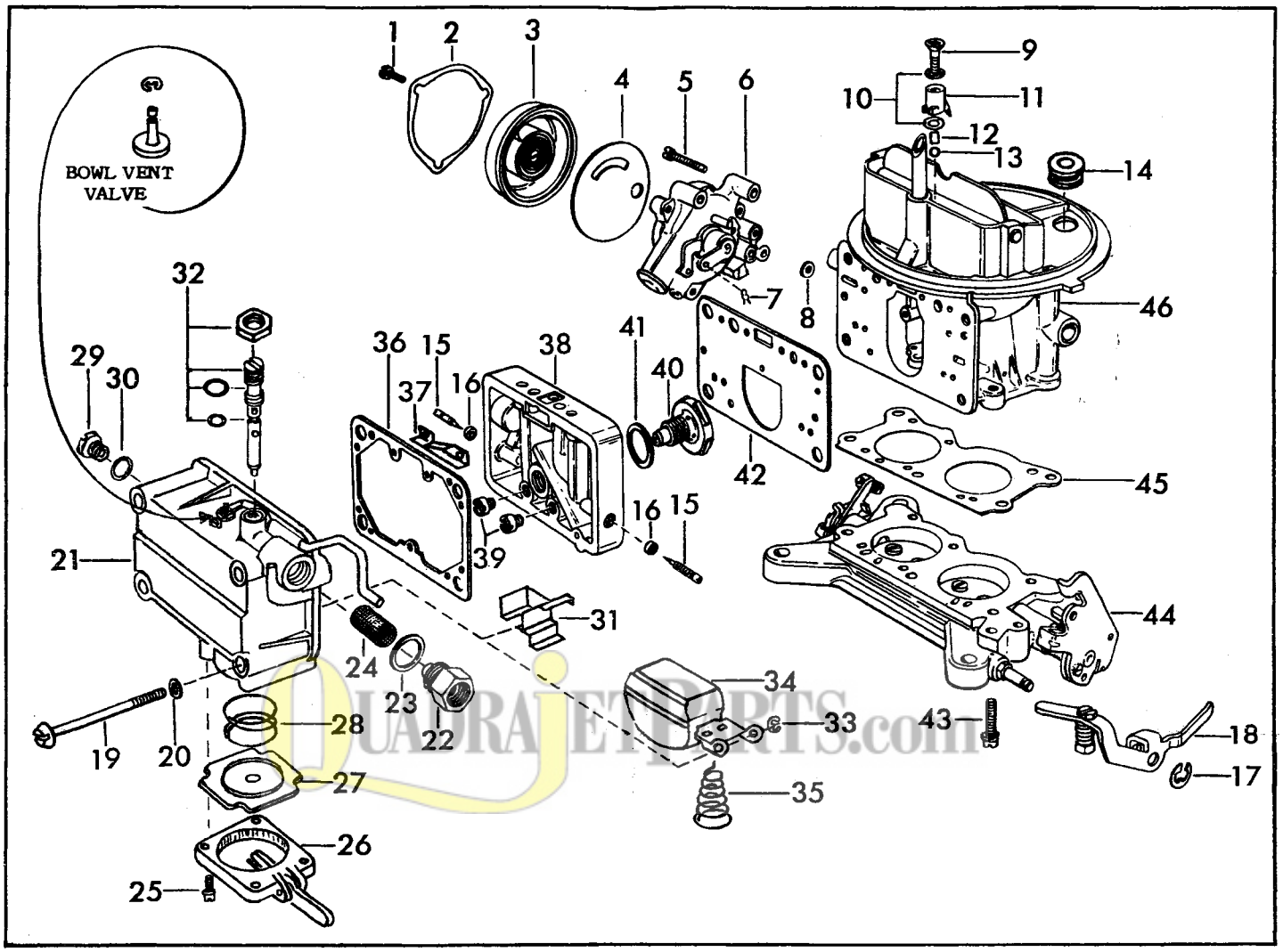

QUADRAJETPARTS.com

NOMENCLATURE

REF. NO.

1. SCREW-STAT COVER
2. CLAMP-STAT COVER
3. STAT COVER
4. GASKET-STAT COVER
5. SCREW & LOCKWASHER-CHOKE HOUSING ASSY.
6. CHOKE HOUSING ASSY.
7. RETAINER-CHOKE ROD LOWER
8. GASKET-CHOKE HOUSING
9. SCREW-PUMP DISCHARGE NOZZLE
10. GASKETS-PUMP DISCHARGE NOZZLE
11. NOZZLE-PUMP DISCHARGE
12. WEIGHT-PUMP CHECK BALL
13. BALL-PUMP DISCHARGE CHECK
14. GROMMET-COLD AIR CHOKE TUBE
15. NEEDLE-IDLE ADJUSTING
16. SEAL-IDLE NEEDLE
17. RETAINER-PUMP OPERATING LEVER
18. LEVER-PUMP OPERATING
19. SCREW-FUEL BOWL
20. GASKET-FUEL BOWL SCREW
21. FUEL BOWL ASSEMBLY
22. FITTING-FUEL INLET
23. GASKET-FUEL INLET FITTING
24. SCREEN-FUEL INLET

REF. NO.

25. SCREW & LOCKWASHER-PUMP COVER
26. PUMP COVER ASSEMBLY
27. DIAPHRAGM-PUMP
28. SPRING-DIAPHRAGM RETURN
29. PLUG-FUEL LEVEL
30. GASKET-FUEL LEVEL PLUG
31. BAFFLE PLATE
32. NEEDLE,SEAT,O-RINGS & NUT ASSEMBLY
33. RETAINER-FLOAT
34. FLOAT ASSEMBLY
35. SPRING-FLOAT
36. GASKET-FUEL BOWL
37. BAFFLE-METERING BODY VENT
38. BODY-MAIN METERING
39. MAIN JETS
40. POWER VALVE
41. GASKET-POWER VALVE
42. GASKET-METERING BODY
43. SCREW & LOCKWASHER-THROTTLE BODY
44. THROTTLE BODY ASSEMBLY
45. GASKET-THROTTLE BODY
46. MAIN BODY ASSEMBLY