©1981 TECHLIT CO.
Printed in U.S.A.

INSTRUCTION SHEET
OFF VEHICLE CARBURETOR SERVICE
HOLLEY MODEL - 2300 EG

IS- 50-557-2

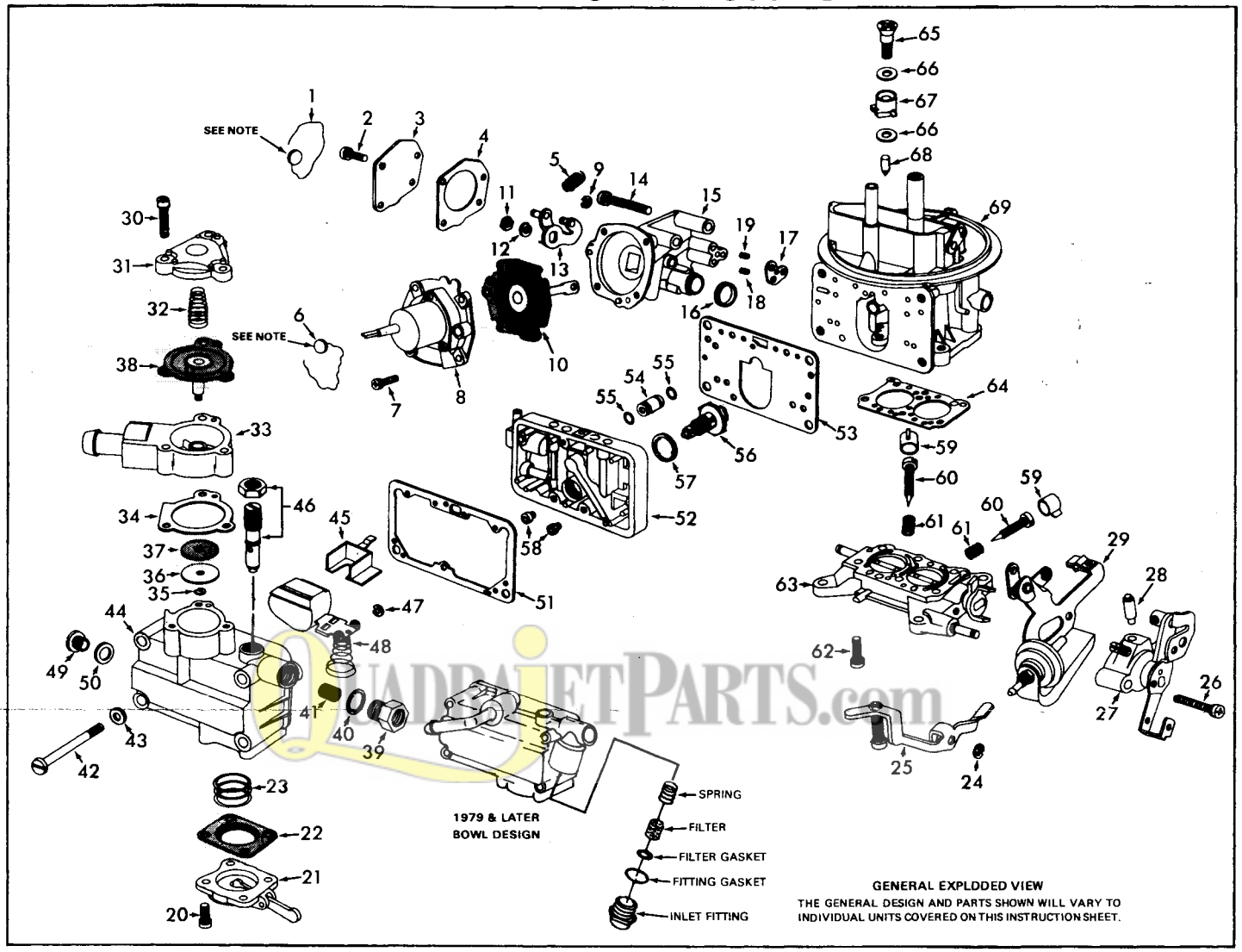

GENERAL EXPLODED VIEW
THE GENERAL DESIGN AND PARTS SHOWN WILL VARY TO INDIVIDUAL UNITS COVERED ON THIS INSTRUCTION SHEET.

QUADRAJETPARTS.com

DISASSEMBLY

USE EXPLODED VIEW AS A GUIDE. THE NUMERICAL SEQUENCE MAY GENERALLY BE FOLLOWED TO DISASSEMBLE UNIT FAR ENOUGH TO PERMIT CLEANING AND INSPECTION. NOTE: WHEN REMOVING GOVERNOR BY PASS JETS A AND B (18), (19), RECORD SIZE AND LOCATION FOR PROPER REASSEMBLY. (1982 TAMPERPROOF IDLE MIXTURE SCREW REMOVAL SEE FIG. 8.

CLEANING

CLEANING MUST BE DONE WITH CARBURETOR DISASSEMBLED. SOAK PARTS LONG ENOUGH TO SOFTEN AND REMOVE ALL FOREIGN MATERIAL. USE A CARBURETOR CLEANING SOLVENT. MAKE CERTAIN THE THROTTLE BORES ARE FREE OF ALL CARBON AND VARNISH DEPOSITS. RINSE OFF IN SUITABLE SOLVENT. BLOW OUT ALL PASSAGES IN CASTINGS WITH COMPRESSED AIR AND CHECK CAREFULLY TO INSURE THOROUGH CLEANING OF OBSCURE AREAS. CAUTION: DO NOT SOAK PARTS CONTAINING RUBBER MATERIALS OR PARTS SUCH AS (8), (10), (16), (46), (48), (56), IN CLEANING SOLVENTS.

REASSEMBLY

REASSEMBLE IN REVERSE ORDER OF DISASSEMBLY. NOTE SPECIAL INSTRUCTIONS AND FOLLOW NUMERICAL OUTLINE IN MAKING ADJUSTMENTS NECESSARY FOR CARBURETOR BEING SERVICED.

SPECIAL INSTRUCTIONS

THROTTLE BODY SCREWS (62)-TIGHTEN IN THREE STAGES CROSSWISE TO ARRIVE AT THE CORRECT TORQUE. (50 INCH POUNDS)

IDLE ADJUSTING SCREWS (60)-TURN IN UNTIL LIGHTLY SEATED, THEN BACK OUT 2 1/2 TURNS. (DO NOT INSTALL IDLE LIMITER CAPS AT THIS TIME). (1982 SEE FIG. 8))

ENRICHMENT VALVE (56)-TORQUE TO 100 INCH POUNDS.

O-RINGS-LIGHTLY LUBRICATE FOR EASIER INSTALLATION.

FUEL BOWL (44)-BEFORE INSTALLING, MAKE DRY FLOAT LEVEL ADJUSTMENT.

BOWL SCREWS AND GASKETS (42), (43)-INSTALL GASKETS ON SCREWS, INSTALL AND TORQUE EVENLY IN STAGES TO 50 INCH POUNDS.

NOTE: ITEM NO. 1 & 6 IS NOT A KIT SERVICE REPLACEMENT PART

NOMENCLATURE

REF. NO.		REF. NO.	
1.	SEAL & WIRE - COVER	34.	GASKET - HOUSING
2.	SCREW & LKWSHR. (4) - COVER	35.	E CLIP - BOWL VENT VALVE
3.	COVER - GOVERNOR HOUSING	36.	WASHER - VENT VALVE
4.	GASKET - COVER	37.	VALVE - VENT
5.	SPRING - GOVERNOR	38.	DIAPHRAGM - VENT VALVE
6.	SEAL & WIRE - DIAPHRAGM COVER	39.	FITTING - FUEL INLET
7.	SCREW & LKWSHR. (4) - DIAPHRAGM COVER & SOLENOID ASSEMBLY	40.	GASKET - FITTING
8.	COVER ASSY. - DIAPHRAGM & SOLENOID	41.	SCREEN - FUEL INLET
9.	E CLIP - DIAPHRAGM STEM RETAINER	42.	SCREW (4) - FUEL BOWL
10.	DIAPHRAGM ASSEMBLY	43.	GASKET (4) - FUEL BOWL SCREWS
11.	NUT - GOVERNOR LEVER	44.	FUEL BOWL ASSY.
12.	LOCKWASHER - GOVERNOR LEVER	45.	BAFFLE PLATE
13.	LEVER - GOVERNOR	46.	NEEDLE & SEAT ASSY.
14.	SCREW & LKWSHR. (3) - GOV. HOUSING	47.	E CLIP - FLOAT RETAINER
15.	HOUSING ASSEMBLY - GOVERNOR	48.	FLOAT & SPRING ASSY.
16.	SEAL - GOVERNOR HOUSING	49.	PLUG - FUEL LEVEL
17.	GASKET - GOVERNOR HOUSING	50.	GASKET - PLUG
18.	JET A - GOVERNOR HOUSING	51.	GASKET - FUEL BOWL
19.	JET B - GOVERNOR HOUSING	52.	METERING BLOCK ASSY.
20.	SCREW & LKWSHR. (4) - COVER	53.	GASKET - METERING BLOCK
21.	COVER ASSY. - PUMP DIAPHRAGM	54.	CONNECTOR - PUMP CHANNEL
22.	DIAPHRAGM - PUMP	55.	O RING (2) - CONNECTOR
23.	SPRING - DIAPHRAGM	56.	VALVE - ENRICHMENT (2 STAGE)
24.	E CLIP - LEVER	57.	GASKET - ENRICHMENT VALVE
25.	LEVER ASSEMBLY - PUMP	58.	JETS (2) - MAIN
26.	SCREW (2) - THROTTLE OPERATING SHAFT HOUSING	59.	CAP (2) - IDLE LIMITER
27.	HOUSING ASSY. - THROTTLE OPERATING SHAFT	60.	SCREW (2) - IDLE ADJUSTING
28.	PLUNGER & SCREW - FAST IDLE	61.	SPRING (2) - IDLE ADJUSTING SCREW
29.	BRACKET ASSY. - CHOKE LEVER, DASHPOT	62.	SCREW & LKWSHR. (6) - THROTTLE BODY
30.	SCREW & LKWSHR. (3) - BOWL VENT ASSY. (CALIF.)	63.	THROTTLE BODY ASSY.
31.	COVER - VENT ASSEMBLY	64.	GASKET - THROTTLE BODY
32.	SPRING - DIAPHRAGM	65.	SCREW - PUMP DISCHARGE NOZZLE
33.	HOUSING ASSEMBLY - BOWL VENT	66.	GASKET (2) - PUMP DISCHARGE NOZZLE
		67.	NOZZLE - PUMP DISCHARGE
		68.	NEEDLE - PUMP DISCHARGE
		69.	MAIN BODY ASSY.

ADJUSTMENTS

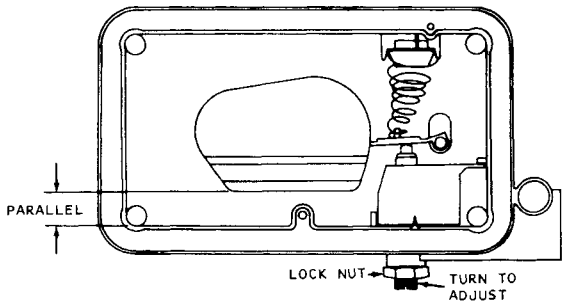

FLOAT BOWL INVERTED, TURN NEEDLE SEAT ASSY. UNTIL FLOAT SURFACE IS PARALLEL WITH THE SURFACE DIRECTLY BELOW THE FLOAT. TIGHTEN LOCK NUT.

DRY FLOAT LEVEL ADJUSTMENT FIG. 1

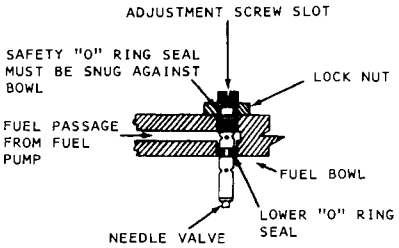

THE EXCLUSIVE SEALING FEATURES OF THIS ASSEMBLY PROVIDE SAFE ADJ. OF FUEL LEVEL WHILE ENGINE IS RUNNING.

SAFETY SEAL ADJUSTABLE FUEL VALVE FIG.2

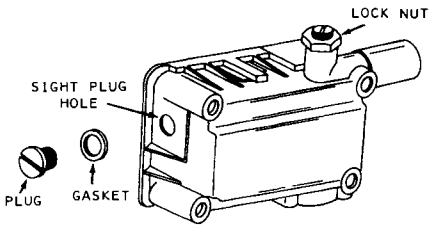

1. TRUCK SETTING ON LEVEL SURFACE AND ENGINE RUNNING.
2. REMOVE SIGHT LEVEL PLUG FROM BOWL.
3. ADJUST NEEDLE SEAT ASSY. SO FUEL LEVEL WILL BE AT BOTTOM EDGE OF SIGHT PLUG HOLE. (PLUS OR MINUS 1/32" TOLERANCE.)
4. TIGHTEN LOCK NUT.

WET FLOAT LEVEL ADJUSTMENT FIG.3

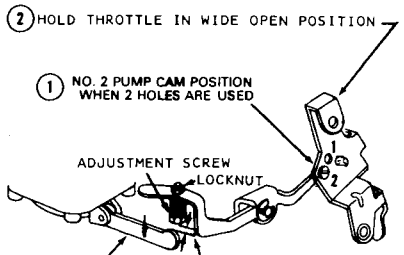

PUMP ADJUSTMENT FIG. 4

TO ADJUST CURB IDLE. REFER TO SERVICE MANUAL AND/OR DECALS IN ENGINE COMPARTMENT.

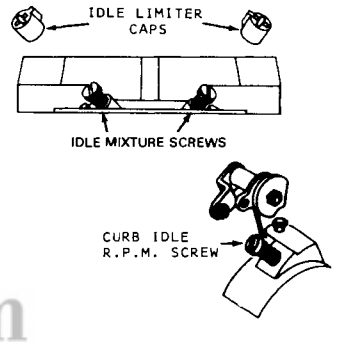

CURB IDLE ADJUSTMENT FIG. 5

QUADRAJETPARTS.com

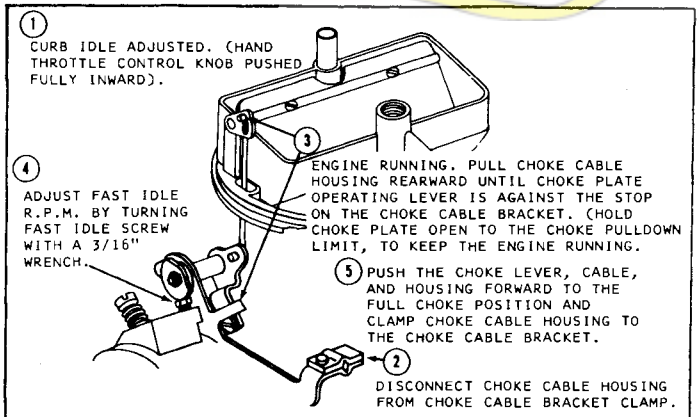

FAST IDLE SPEED ADJUSTMENT FIG. 6

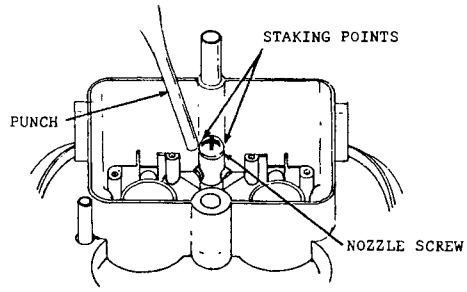

PUMP NOZZLE (67)AND SCREW (65)INSTALLATION- TIGHTEN SCREW SECURELY. USING A FLAT PUNCH AND HAMMER, STAKE THE NOZZLE SCREW IN POSITION.(CARE SHOULD BE USED WHEN STAKING THE NOZZLE SO AS NOT TO USE EXCESSIVE FORCE).REMOVE ANY CHIPS FROM CARBURETOR BODY.

PUMP DISCHARGE NOZZLE SCREW STAKING FIG. 7

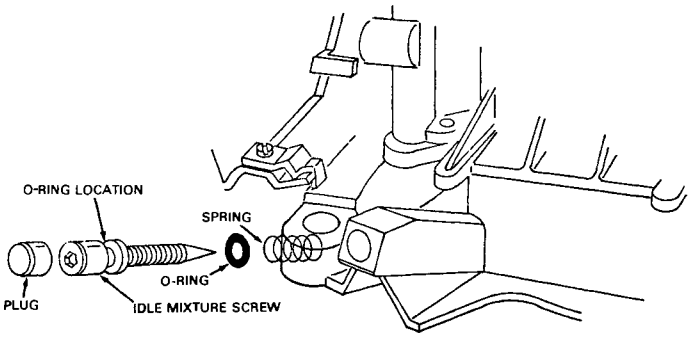

1982 TAMPERPROOF IDLE MIXTURE SCREWS

TO REMOVE TAMPERPROOF IDLE MIXTURE CONCEALMENT PLUG. CENTER PUNCH AND DRILL A 3/32" DIAMETER HOLE THROUGH THE HARDENED STEEL PLUG. INSTALL AN EASY OUT AND REMOVE THE PLUG.

BEFORE REMOVING IDLE ADJUSTING SCREWS, CAREFULLY TURN SCREWS IN CLOCKWISE COUNTING THE NUMBER OF TURNS IT TAKES TO LIGHTLY SEAT SCREWS. (RECORD FOR PROPER REASSEMBLY). IDENTIFY SCREWS TO RETURN TO THE SAME HOLES. (RIGHT AND LEFT).

REASSEMBLY: TURN IN IDLE MIXTURE SCREWS UNTIL LIGHTLY SEATED. THEN BACK OUT THE NUMBER OF TURNS RECORDED ON DISASSEMBLY.

REPLACE PLUG TO INSURE PROPER METERING.

FIG. 8