©1989 TECHLIT CO.
Printed in U.S.A.

INSTRUCTION SHEET

50-693-1

OFF VEHICLE CARBURETOR SERVICE
HOLLEY MODEL 2380 EG

GENERAL EXPLODED VIEW
ACTUAL UNITS MAY VARY

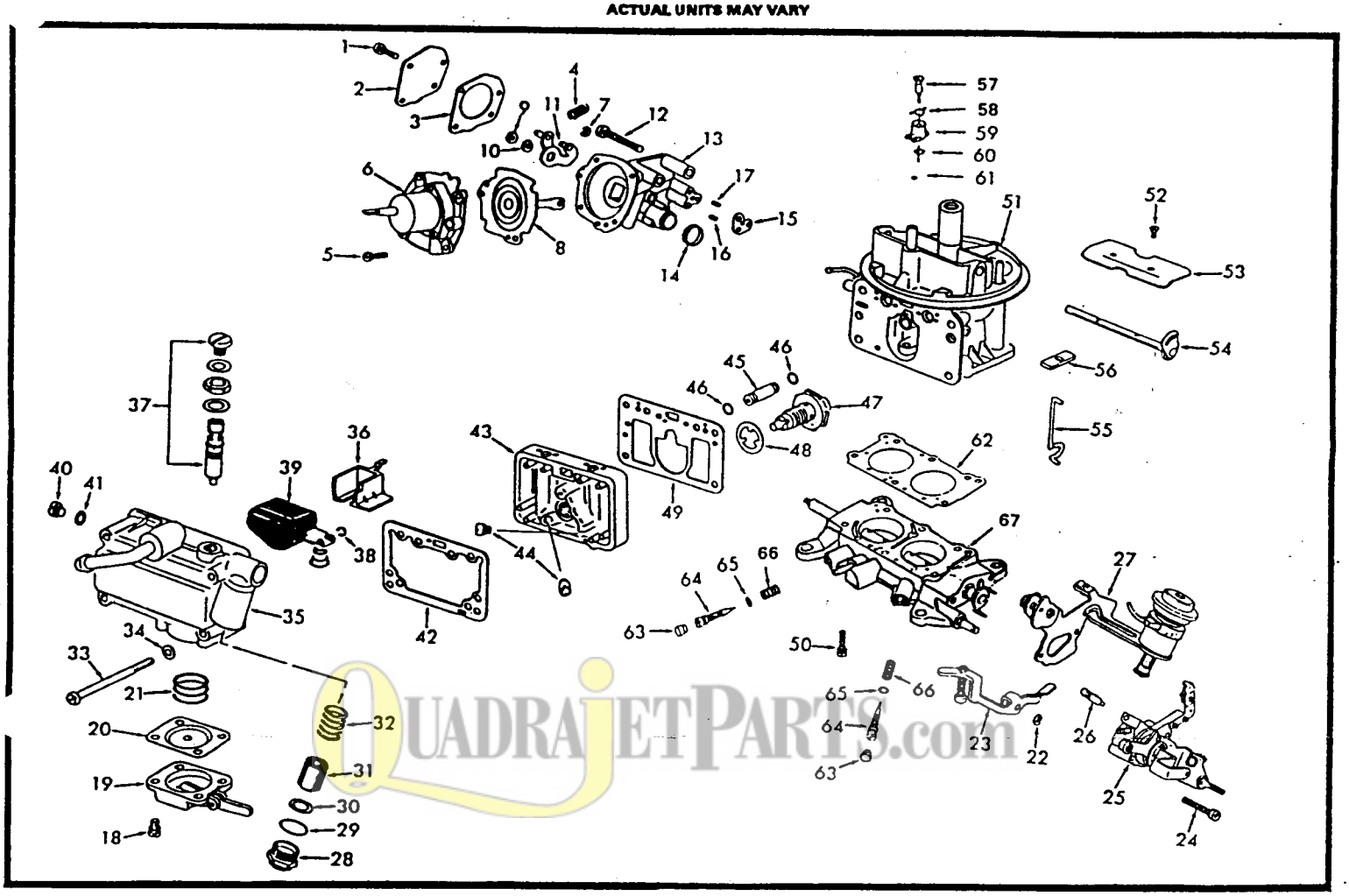

QUADRAJETPARTS.com

DISASSEMBLY

USE EXPLODED VIEW AS A GUIDE. THE NUMERICAL SEQUENCE MAY GENERALLY BE FOLLOWED TO DISASSEMBLE UNIT FAR ENOUGH FOR CLEANING AND INSPECTION. **NOTE:** THE CHOKE PLATE RETAINING SCREWS ARE STAKED AT THE THREADED END. THIS STAKING MUST BE FILED OFF BEFORE REMOVING THE SCREWS (BE CAREFUL NOT TO DAMAGE THE CHOKE SHAFT OR VENTURI WHILE FILING). TO REMOVE TAMPERPROOF IDLE MIXTURE SCREWS SEE FIG. 1.

CLEANING

CLEANING MUST BE DONE WITH CARBURETOR DISASSEMBLED. SOAK PARTS LONG ENOUGH TO SOFTEN AND REMOVE ALL FOREIGN MATERIAL USING A COLD IMMERSION TYPE CARBURETOR CLEANER. MAKE CERTAIN THE THROTTLE BORES ARE FREE OF ALL CARBON AND VARNISH DEPOSITS. RINSE OFF IN SUITABLE SOLVENT. BLOW OUT ALL PASSAGES IN CASTINGS WITH COMPRESSED AIR AND CHECK CAREFULLY TO INSURE THOROUGH CLEANING OF OBSCURE AREAS. **CAUTION:** DO NOT SOAK PARTS CONTAINING RUBBER, FLOATS, OR DIAPHRAGM ASSEMBLIES.

REASSEMBLY

REASSEMBLE IN REVERSE ORDER OF DISASSEMBLY. NOTE SPECIAL INSTRUCTIONS AND FOLLOW NUMERICAL OUTLINE IN MAKING ADJUSTMENTS NECESSARY FOR CARBURETOR BEING SERVICED.

SPECIAL INSTRUCTIONS

THROTTLE BODY SCREWS (50): CROSS-TIGHTEN IN THREE STAGES TO ARRIVE AT CORRECT TORQUE (50 INCH-POUNDS).
IDLE ADJUSTING SCREWS (64): TURN IN UNTIL LIGHTLY SEATED, THEN BACK OUT NUMBER OF TURNS RECORDED ON DISASSEMBLY.
ENRICHMENT VALVE (47): TORQUE TO 100 INCH-POUNDS.
O-RINGS-LIGHTLY LUBRICATE FOR EASIER INSTALLATION.
FUEL BOWL (35): BEFORE INSTALLING MAKE DRY FLOAT ADJUSTMENT.
BOWL SCREWS AND GASKETS (33), (34): INSTALL GASKETS ON SCREWS, TORQUE EVENLY IN STAGES TO 60 INCH-POUNDS.

NOMENCLATURE

REF. NO.	
1.	SCREW & WASHER (4), COVER
2.	COVER, GOVERNOR HOUSING
3.	GASKET, COVER
4.	SPRING, GOVERNOR
5.	SCREW & WASHER (4), DIAPHRAGM COVER & SOLENOID ASSEMBLY
6.	COVER ASSY., DIAPH. & SOLENOID
7.	E-CLIP, DIAPHRAGM STEM RETAINER
8.	DIAPHRAGM ASSEMBLY
9.	NUT, GOVERNOR LEVER
10.	LOCKWASHER, GOVERNOR LEVER
11.	GOVERNOR LEVER
12.	SCREW & WASHER (3), GOV. HSNG.
13.	HOUSING ASSEMBLY, GOVERNOR
14.	SEAL, GOVERNOR HOUSING
15.	GASKET, GOVERNOR HOUSING
16.	JET A, GOVERNOR HOUSING
17.	JET B, GOVERNOR HOUSING
18.	SCREW & WASHER (4), COVER
19.	COVER ASSEMBLY, PUMP DIAPHRAGM
20.	PUMP DIAPHRAGM
21.	SPRING, DIAPHRAGM
22.	E-CLIP, LEVER
23.	LEVER ASSEMBLY, PUMP
24.	SCREW (2), THROTTLE OPERATING SHAFT HOUSING
25.	HOUSING ASSY., THROTTLE OPERATING SHAFT
26.	PLUNGER & SCREW, FAST IDLE
27.	BRACKET ASSY., CHOKE LEVER AND DASHPOT
28.	FITTING, FUEL INLET
29.	GASKET, FUEL FITTING
30.	GASKET, FUEL FILTER
31.	FUEL FILTER
32.	SPRING, FUEL FILTER
33.	SCREW (4), FUEL BOWL
34.	GASKET (4), FUEL BOWL SCREW
35.	FUEL BOWL ASSEMBLY
36.	BAFFLE PLATE
37.	NEEDLE & SEAT ASSEMBLY
38.	E-CLIP, FLOAT RETAINER
39.	FLOAT & SPRING ASSEMBLY
40.	PLUG, FUEL LEVEL
41.	GASKET, PLUG
42.	GASKET, FUEL BOWL
43.	METERING BLOCK ASSEMBLY
44.	JETS (2), MAIN
45.	CONNECTOR, PUMP CHANNEL
46.	O-RING (2), CONNECTOR
47.	VALVE, ENRICHMENT (2-STAGE)
48.	GASKET, ENRICHMENT VALVE
49.	GASKET, METERING BLOCK
50.	SCREW & WASHER (6), THROT. BODY
51.	MAIN BODY ASSEMBLY
52.	SCREW (2), CHOKE PLATE
53.	PLATE, CHOKE
54.	SHAFT, CHOKE PLATE
55.	ROD, CHOKE
56.	SEAL, CHOKE ROD
57.	SCREW, PUMP DISCHARGE NOZZLE
58.	LOCKPLATE, PUMP DISC. NOZZLE
59.	NOZZLE, PUMP DISCHARGE
60.	GASKET, PUMP DISCH. NOZZLE
61.	BALL, PUMP DISCHARGE
62.	GASKET, THROTTLE BODY
63.	PLUG (2), IDLE LIMITER
64.	SCREW (2), IDLE ADJUSTING
65.	O-RING (2), IDLE ADJ. SCREW
66.	SPRING (2), IDLE ADJ. SCREW
67.	THROTTLE BODY ASSEMBLY

ADJUSTMENTS

TO REMOVE TAMPERPROOF IDLE MIXTURE SCREW PLUGS, INVERT THE CARBURETOR AND CENTER PUNCH THE THROTTLE BODY 5/16 INCH FROM THE FACE OF EACH SCREW CAVITY AS SHOWN. USING A 1/8 INCH DRILL BIT, DRILL APPROXIMATELY 1/16 INCH DEEP. THEN TIP THE DRILL BACK SUCH THAT THE BIT IS POINTED TOWARD THE PLUG (TIP APPROXIMATELY 60° WITH RESPECT TO THE THROTTLE BODY FACE). DRILL THROUGH UNTIL THE BIT CONTACTS THE TAMPERPROOF PLUG.

WITH A 1/8 INCH OR LESS DIAMETER PUNCH GENTLY TAP OUT THE TAMPERPROOF PLUGS.

BEFORE REMOVING IDLE ADJUSTING SCREWS, CAREFULLY TURN SCREWS IN CLOCKWISE COUNTING THE NUMBER OF TURNS IT TAKES TO LIGHTLY SEAT SCREWS, (RECORD FOR PROPER REASSEMBLY). IDENTIFY SCREWS TO RETURN TO THE SAME HOLES. (RIGHT AND LEFT).

REASSEMBLY: TURN IN IDLE MIXTURE SCREWS UNTIL LIGHTLY SEATED. THEN BACK OUT THE NUMBER OF TURNS RECORDED ON DISASSEMBLY.

REPLACE PLUG AFTER IDLE MIXTURE SETTING PROCEDURE. (ENGINE/EMISSIONS DIAGNOSIS MANUAL)

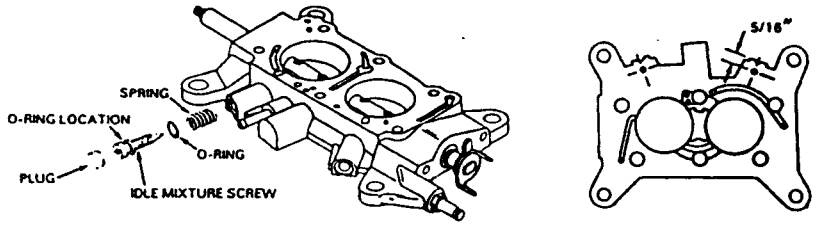

TAMPERPROOF IDLE MIXTURE SCREWS — FIG. 1

FLOAT BOWL INVERTED, TURN NEEDLE SEAT ASSY UNTIL FLOAT SURFACE IS PARALLEL WITH THE SURFACE DIRECTLY BELOW THE FLOAT. TIGHTEN LOCK SCREW

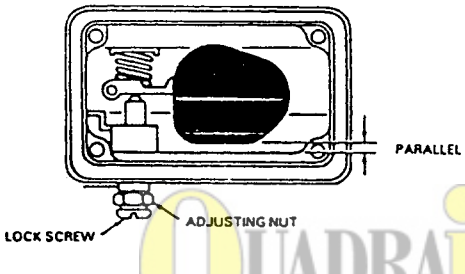

DRY FLOAT LEVEL ADJUSTMENT — FIG. 2

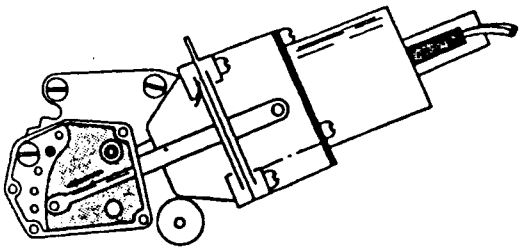

INSTALL COVER WITH THE SCREWS FINGER TIGHT. PULL THE DIAPHRAGM ROD AS FAR AS IT WILL GO AND THEN TIGHTEN SCREWS EVENLY WHILE MAINTAINING DIAPHRAGM STRETCHED IN THIS POSITION.

INSTALLING GOVERNOR DIAPHRAGM — FIG. 3

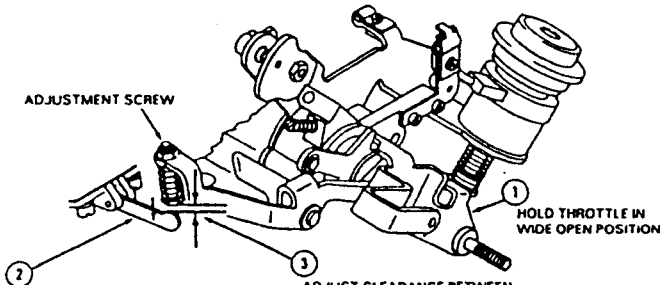

PUMP ADJUSTMENT — FIG. 4

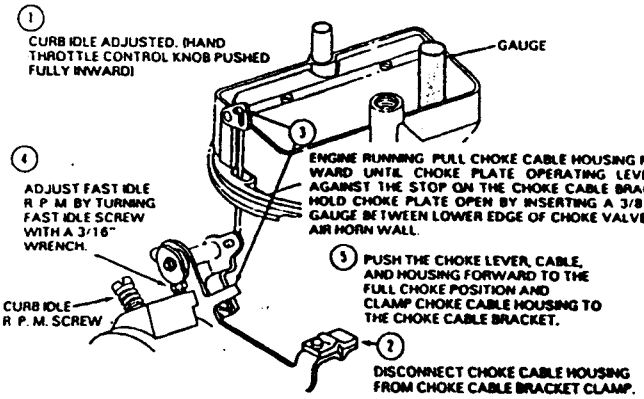

FAST IDLE SPEED ADJUSTMENT — FIG. 5

QUADRAJETPARTS.com

©1985 TECHLIT CO.
Printed in U.S.A.

INSTRUCTION SHEET
OFF VEHICLE CARBURETOR SERVICE
HOLLEY MODEL - 2380EG

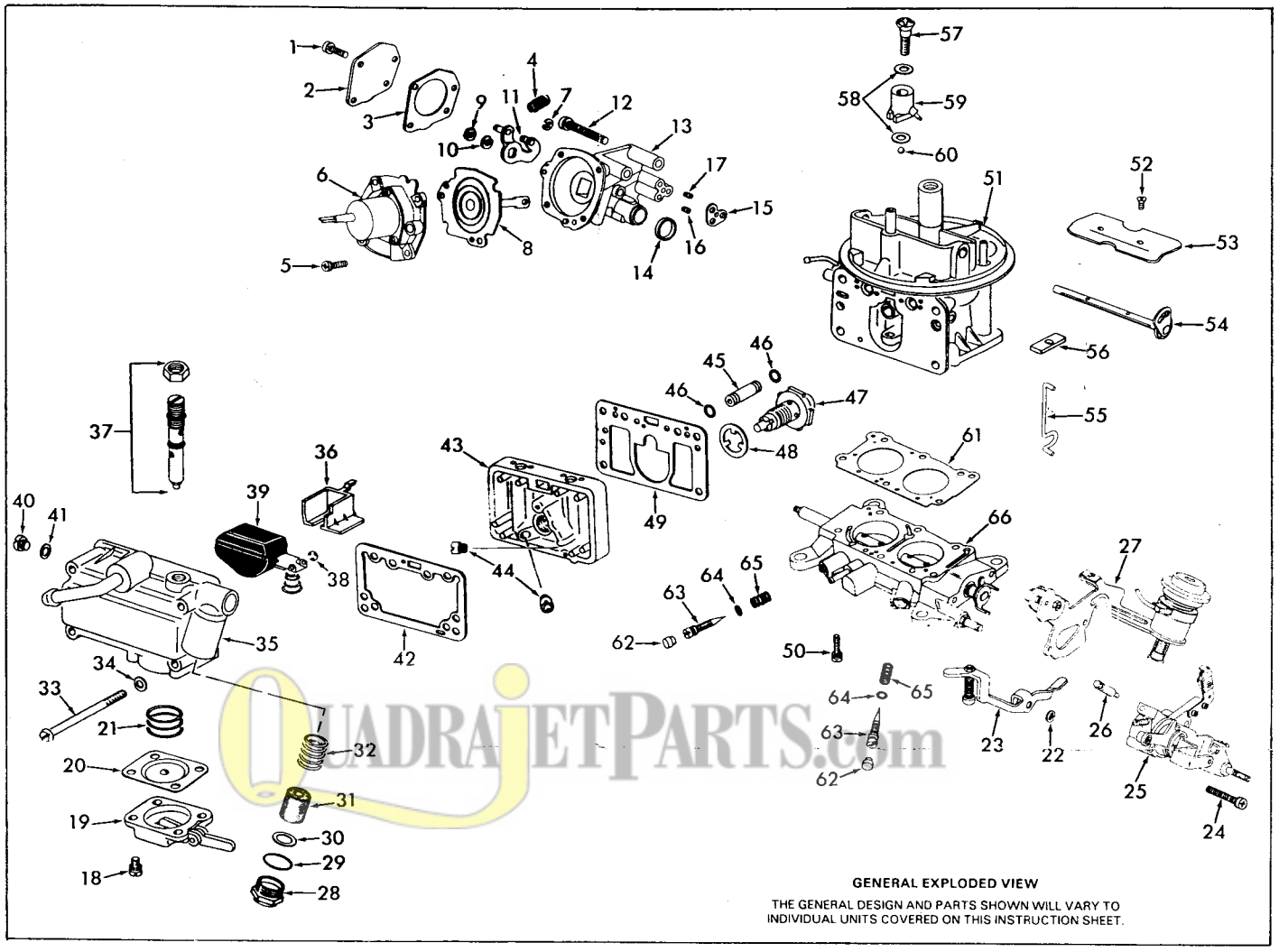

GENERAL EXPLODED VIEW

THE GENERAL DESIGN AND PARTS SHOWN WILL VARY TO INDIVIDUAL UNITS COVERED ON THIS INSTRUCTION SHEET.

QUADRAJETPARTS.com

DISASSEMBLY

USE EXPLODED VIEW AS A GUIDE. THE NUMERICAL SEQUENCE MAY GENERALLY BE FOLLOWED TO DISASSEMBLE UNIT FAR ENOUGH TO PERMIT CLEANING AND INSPECTION. NOTE: THE CHOKE PLATE RETAINING SCREWS ARE STAKED AT THE THREADED END AND THIS STAKING MUST BE FILED OFF BEFORE REMOVING SCREWS. (BE CAREFUL NOT TO DAMAGE THE CHOKE SHAFT OR VENTURI WHILE FILING THE SCREWS.) TO REMOVE TAMPERPROOF IDLE MIXTURE SCREWS SEE FIG. 1

CLEANING

CLEANING MUST BE DONE WITH CARBURETOR DISASSEMBLED. SOAK PARTS LONG ENOUGH TO SOFTEN AND REMOVE ALL FOREIGN MATERIAL USING A COLD IMMERSION TYPE CARBURETOR CLEANER. MAKE CERTAIN THE THROTTLE BORES ARE FREE OF ALL CARBON AND VARNISH DEPOSITS. RINSE OFF IN SUITABLE SOLVENT. BLOW OUT ALL PASSAGES IN CASTINGS WITH COMPRESSED AIR AND CHECK CAREFULLY TO INSURE THOROUGH CLEANING OF OBSCURE AREAS. CAUTION: DO NOT SOAK ASSEMBLIES WITH ATTACHED PLASTIC PARTS FOR A LONG PERIOD OF TIME. DO NOT SOAK ANY PARTS CONTAINING RUBBER, FLOATS, OR DIAPHRAGM ASSEMBLIES.

REASSEMBLY

REASSEMBLE IN REVERSE ORDER OF DISASSEMBLY. NOTE SPECIAL INSTRUCTIONS AND FOLLOW NUMERICAL OUTLINE IN MAKING ADJUSTMENTS NECESSARY FOR CARBURETOR BEING SERVICED.

SPECIAL INSTRUCTIONS

O-RINGS-LIGHTLY LUBRICATE FOR EASIER INSTALLATION.

IDLE ADJUSTING SCREWS-TURN IN UNTIL LIGHTLY SEATED, THEN BACK OUT NUMBER OF TURNS RECORDED ON DISASSEMBLY.

PUMP NOZZLE STAKING SEE FIG. 2

THROTTLE BODY SCREWS (50)-TIGHTEN IN THREE STAGES CROSSWISE TO ARRIVE AT THE CORRECT TORQUE. (50 INCH POUNDS.)

ENRICHMENT VALVE (47)-TORQUE TO 100 INCH POUNDS.

FUEL BOWL (35)-BEFORE INSTALLING, MAKE DRY FLOAT LEVEL ADJUSTMENT.

BOWL SCREWS AND GASKETS (33) & (34)-INSTALL GASKETS ON SCREWS, INSTALL AND TORQUE EVENLY IN STAGES TO 50 INCH POUNDS.

NOMENCLATURE

REF. NO.		REF. NO.	
1.	SCREW & LOCKWASHER (4)-COVER	32.	SPRING-FILTER
2.	COVER-GOVERNOR HOUSING	33.	SCREW (4)-FUEL BOWL
3.	GASKET-COVER	34.	GASKET (4)-FUEL BOWL SCREWS
4.	SPRING-GOVERNOR	35.	FUEL BOWL ASSEMBLY
5.	SCREW & LOCKWASHER (4)-DIAPHRAGM COVER & SOLENOID ASSY.	36.	BAFFLE PLATE
6.	COVER ASSY.-DIAPHRAGM & SOLENOID	37.	NEEDLE & SEAT ASSEMBLY
7	E-CLIP-DIAPHRAGM STEM RETAINER	38.	E-CLIP-FLOAT RETAINER
8.	DIAPHRAGM ASSY.-GOVERNOR	39.	FLOAT & SPRING ASSEMBLY
9.	NUT-GOVERNOR LEVER	40.	PLUG-FUEL LEVEL
10.	LOCKWASHER-GOVERNOR LEVER	41.	GASKET-PLUG
11.	LEVER-GOVERNOR	42.	GASKET-FUEL BOWL
12.	SCREW & LOCKWASHER (3)-GOV. HOUSING	43.	METERING BLOCK ASSEMBLY
13.	HOUSING ASSEMBLY-GOVERNOR	44.	JETS (2)-MAIN
14.	SEAL-GOVERNOR HOUSING	45.	CONNECTOR-PUMP CHANNEL
15.	GASKET-GOVERNOR HOUSING	46.	O-RING (2)-CONNECTOR
16.	JET A-GOVERNOR HOUSING	47.	VALVE-ENRICHMENT (2 STAGE)
17.	JET B-GOVERNOR HOUSING	48.	GASKET-ENRICHMENT VALVE
18.	SCREW & LOCKWASHER (4)-COVER	49.	GASKET-METERING BLOCK
19.	COVER ASSY.-PUMP DIAPHRAGM	50.	SCREW & LOCKWASHER (6)-THROTTLE BODY
20.	DIAPHRAGM-PUMP	51.	MAIN BODY ASSEMBLY
21.	SPRING-PUMP DIAPHRAGM	52.	SCREW (2)-CHOKE PLATE
22.	E-CLIP-LEVER	53.	PLATE-CHOKE
23.	LEVER ASSEMBLY-PUMP	54.	SHAFT-CHOKE PLATE
24.	SCREW (2)-THROTTLE OPERATING SHAFT HOUSING	55.	ROD-CHOKE
25.	HOUSING ASSY.-THROTTLE OPERATING SHAFT	56.	SEAL-CHOKE ROD
26.	PLUNGER & SCREW-FAST IDLE	57.	SCREW-PUMP DISCHARGE NOZZLE
27.	BRACKET ASSY.-CHOKE LEVER & DASHPOT	58.	GASKET (2)-PUMP DISCHARGE NOZZLE
28.	FITTING-FUEL INLET	59.	NOZZLE-PUMP DISCHARGE
29.	GASKET-FITTING	60.	BALL-PUMP DISCHARGE
30.	GASKET-FILTER	61.	GASKET-THROTTLE BODY
31.	FILTER-FUEL INLET	62.	PLUG (2)-IDLE LIMITER
		63.	SCREW (2)-IDLE ADJUSTING
		64.	O-RING (2)-IDLE ADJ. SCREW
		65.	SPRING (2)-IDLE ADJ. SCREW
		66.	THROTTLE BODY ASSEMBLY

ADJUSTMENTS

TO REMOVE TAMPERPROOF IDLE MIXTURE SCREW PLUGS. INVERT THE CARBURETOR AND CENTER PUNCH THE THROTTLE BODY 5/16 INCH FROM THE FACE OF EACH SCREW CAVITY AS SHOWN. USING A 1/8 INCH DRILL BIT, DRILL APPROXIMATELY 1/16 INCH DEEP. THEN TIP THE DRILL BACK SUCH THAT THE BIT IS POINTED TOWARD THE PLUG (TIP APPROXIMATELY 60° WITH RESPECT TO THE THROTTLE BODY FACE). DRILL THROUGH UNTIL THE BIT CONTACTS THE TAMPERPROOF PLUG.

WITH A 1/8 INCH OR LESS DIAMETER PUNCH GENTLY TAP OUT THE TAMPERPROOF PLUGS.

BEFORE REMOVING IDLE ADJUSTING SCREWS, CAREFULLY TURN SCREWS IN CLOCKWISE COUNTING THE NUMBER OF TURNS IT TAKES TO LIGHTLY SEAT SCREWS, (RECORD FOR PROPER REASSEMBLY). IDENTIFY SCREWS TO RETURN TO THE SAME HOLES. (RIGHT AND LEFT).

REASSEMBLY: TURN IN IDLE MIXTURE SCREWS UNTIL LIGHTLY SEATED. THEN BACK OUT THE NUMBER OF TURNS RECORDED ON DISASSEMBLY.

REPLACE PLUG AFTER IDLE MIXTURE SETTING PROCEDURE. (ENGINE/EMISSIONS DIAGNOSIS MANUAL)

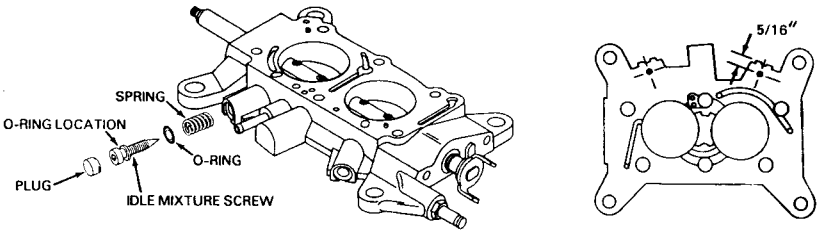

TAMPERPROOF IDLE MIXTURE SCREWS FIG. 1

PUMP NOZZLE AND SCREW INSTALLATION. TIGHTEN SCREW SECURELY. USING A FLAT PUNCH AND HAMMER, STAKE THE NOZZLE AT THE FLAT SIDES OF THE SCREW HEAD. (CARE SHOULD BE USED WHEN STAKING THE NOZZLE SO AS NOT TO USE EXCESSIVE FORCE.) REMOVE ANY CHIPS FROM CARBURETOR BODY.

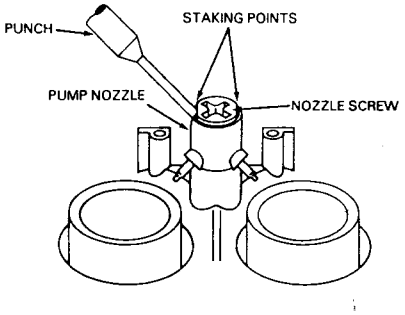

PUMP DISCHARGE NOZZLE SCREW STAKING FIG. 2

FLOAT BOWL INVERTED, TURN NEEDLE SEAT ASSEMBLY UNTIL FLOAT SURFACE IS PARALLEL WITH THE SURFACE DIRECTLY BELOW THE FLOAT, TIGHTEN LOCK NUT

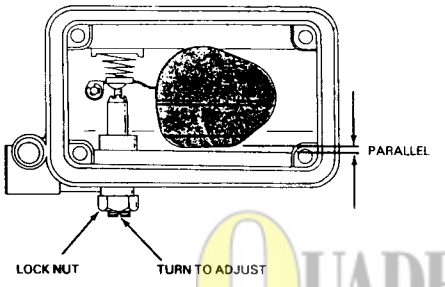

DRY FLOAT LEVEL
ADJUSTABLE NEEDLE & SEAT

FIG. 3

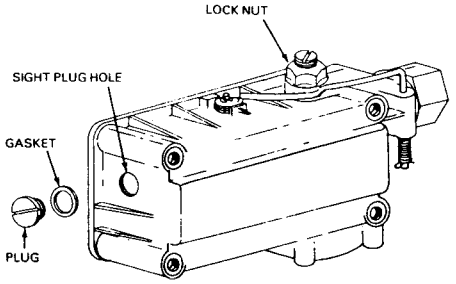

1. VEHICLE SITTING ON LEVEL SURFACE AND ENGINE RUNNING.
2. REMOVE SIGHT LEVEL PLUG FROM HOLE.
3. ADJUST NEEDLE SEAT ASSEMBLY SO FUEL WILL BE AT BOTTOM EDGE OF SIGHT PLUG HOLE. (1/32" TOLERANCE.)
4. TIGHTEN LOCK NUT.

WET FLOAT LEVEL
ADJUSTABLE NEEDLE & SEAT

FIG. 4

QUADRAJETPARTS.com

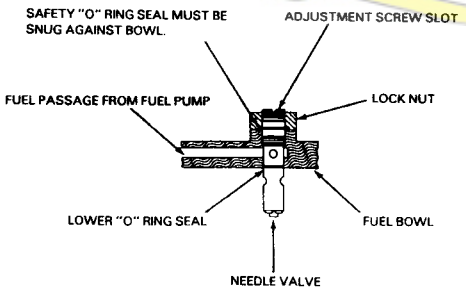

THE EXCLUSIVE SEALING FEATURE OF THIS ASSEMBLY PROVIDE SAFE ADJUSTMENT OF FUEL LEVEL WHILE ENGINE IS RUNNING.

SAFETY SEAL ADJUSTABLE FUEL VALVE

FIG. 5.

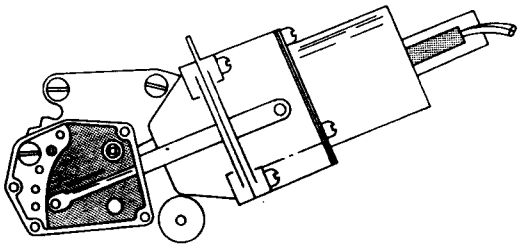

INSTALL COVER WITH THE SCREWS FINGER TIGHT. PULL THE DIAPHRAGM ROD AS FAR AS IT WILL GO AND THEN TIGHTEN SCREWS EVENLY WHILE MAINTAINING DIAPHRAGM STRETCHED IN THIS POSITION.

INSTALLING GOVERNOR DIAPHRAGM FIG. 6.

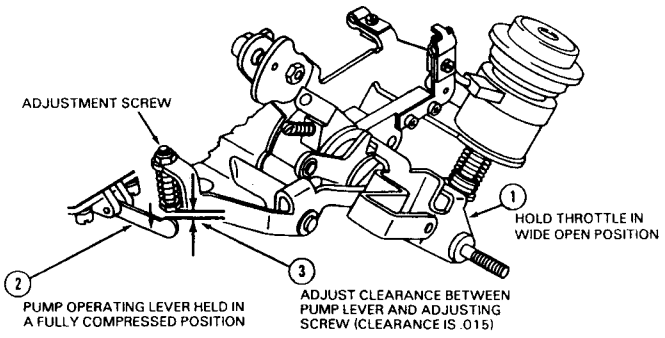

PUMP ADJUSTMENT FIG. 7.

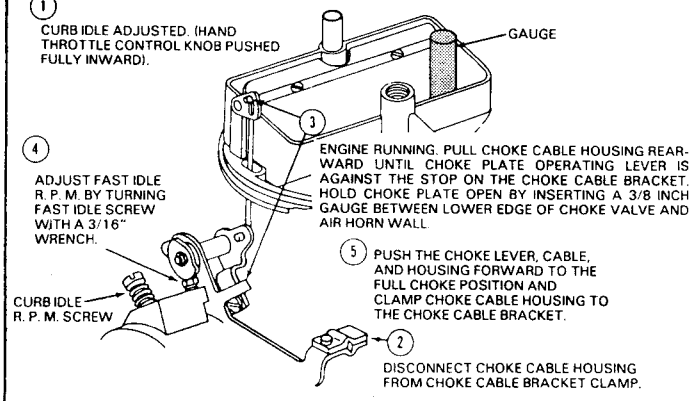

FAST IDLE SPEED ADJUSTMENT FIG. 8