©1988 TECHLIT CO.
Printed in U.S.A.

INSTRUCTION SHEET
OFF VEHICLE CARBURETOR SERVICE
HOLLEY MODEL - 5220 V.O.S.

GENERAL EXPLODED VIEW

THE GENERAL DESIGN AND PARTS SHOWN WILL VARY TO INDIVIDUAL UNITS COVERED ON THIS INSTRUCTION SHEET.

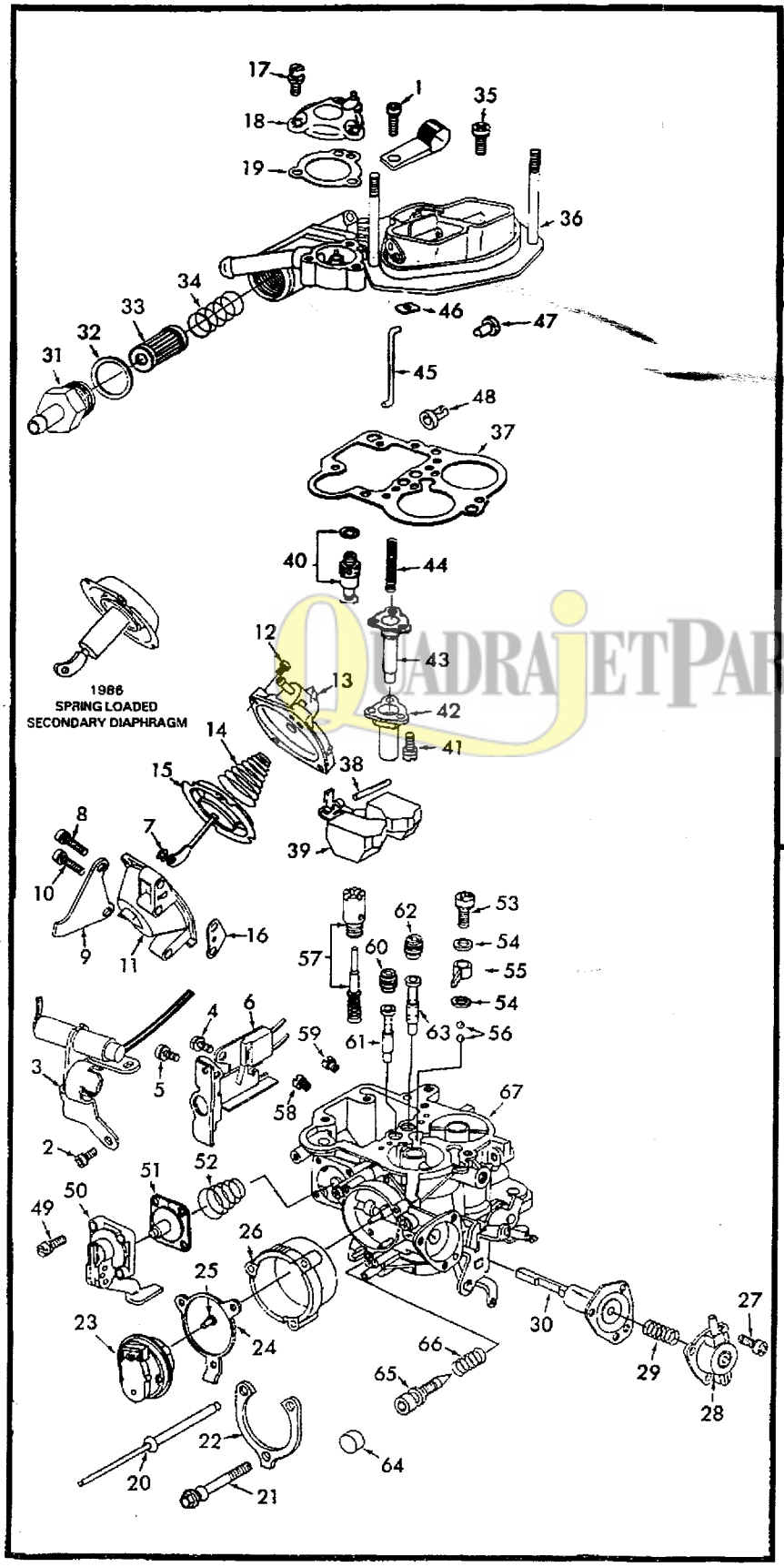

DISASSEMBLY

USE EXPLODED VIEW AS A GUIDE. THE NUMERICAL SEQUENCE MAY GENERALLY BE FOLLOWED TO DISASSEMBLE UNIT FAR ENOUGH TO PERMIT CLEANING AND INSPECTION. CAUTION: NOTE SIZES OF JETS AND MAIN WELL TUBES AND THEIR LOCATION FOR PROPER ASSEMBLY. (RECORD SIZES BELOW). SCREWS AND THREADS ARE METRIC, DO NOT SUBSTITUTE WITH U.S. THREADED SCREWS.

TAMPER RESISTANT CHOKE POP RIVETS CAN BE REMOVED BY DRILLING RIVET HEADS OFF. DRILL OR SAW A SLOT IN BREAK AWAY SCREW HEAD TO REMOVE. REMOVE CHOKE COMPONENTS THEN REMOVE REMAINDER OF RIVETS FROM HOUSING. TO REMOVE IDLE ADJUSTING NEEDLE CONCEALMENT PLUG, DRILL A 1/8" HOLE IN THE BASE AT A 45° ANGLE TOWARDS PLUG, ABOUT 1/4" IN FROM EDGE OF HOUSING. INSERT PUNCH INTO HOLE AND DRIVE PLUG OUT.

NOMENCLATURE

REF. NO.		REF. NO.	
1.	SCREW & LOCKWASHER - LOOM BRACKET	32.	GASKET - FITTING
2.	SCREW & LOCKWASHER (2) - VAC. SOLENOID	33.	FILTER - FUEL
3.	SOLENOID ASSY. - VACUUM CONTROL	34.	SPRING - FUEL FILTER
4.	SCREW HEXHEAD UPPER - A/C CUTOUT SWITCH	35.	SCREW & LOCKWASHER (5) - BOWL COVER
5.	SCREW & LOCKWASHER BRACKET	36.	BOWL COVER ASSY.
6.	A/C CUTOUT SWITCH AND BRACKET ASSY.	37.	GASKET - BOWL COVER
7.	E CLIP - SEC. DIAPHRAGM ROD	38.	PIN - FLOAT
8.	SCREW & LOCKWASHER (2) - SEC. DIAPHRAGM PLATE	39.	FLOAT ASSY.
9.	PLATE SEC. DIAPHRAGM	40.	NEEDLE & SEAT ASSY.
10.	SCREW & LOCKWASHER - SEC. DIAPHRAGM HOUSING	41.	SCREW & LOCKWASHER (3) - COVER
11.	SECONDARY DIAPHRAGM ASSY.	42.	COVER - DIAPHRAGM
12.	SCREW & LOCKWASHER (4) - COVER	43.	DIAPHRAGM ASSY. - POWER VALVE ACTUATOR
13.	COVER - SEC. DIAPHRAGM	44.	SPRING - ACTUATOR DIAPHRAGM
14.	SPRING - SEC. DIAPHRAGM	45.	ROD - CHOKE OPERATING
15.	DIAPHRAGM ASSY. - SECONDARY	46.	SEAL - CHOKE ROD
16.	GASKET - SEC. DIAPHRAGM ASSY.	47.	RETAINER - CHOKE ROD (UPPER)
17.	SCREW & LOCKWASHER (3) - COVER	48.	RETAINER - CHOKE ROD (LOWER)
18.	COVER VENT	49.	SCREW & LOCKWASHER (4) - PUMP COVER
19.	GASKET - VENT COVER	50.	COVER ASSY. - PUMP
20.	POP RIVET (2) - CHOKE RETAINER	51.	DIAPHRAGM ASSY. PUMP
21.	BREAKAWAY SCREW - CHOKE RETAINER	52.	SPRING - DIAPHRAGM RETURN
22.	RETAINER - CHOKE COVER	53.	SCREW - PUMP DISC NOZZLE
23.	CHOKE COVER & COIL ASSY.	54.	GASKET (2) - PUMP NOZZLE
24.	RING- CHOKE GROUND	55.	NOZZLE - PUMP DISCHARGE
25.	BUSHING - COIL SPRING LOOP	56.	BALL (2) - PUMP DISCHARGE
26.	HOUSING - CHOKE COIL ASSY.	57	POWER VALVE ASSY.
27.	SCREW & LOCKWASHER (3) - COVER	58.	JET - PRI. MAIN _____
28.	COVER ASSY. - DIAPHRAGM	59.	JET - SEC. MAIN _____
29.	SPRING - DIAPHRAGM	60.	JET - PRI. HIGH SPEED BLEED _____
30.	DIAPHRAGM ASSY. - CHOKE	61.	TUBE - PRI. MAIN WELL _____
31.	FITTING - FUEL INLET	62.	JET - SEC. HIGH SPEED BLEED _____
		63.	TUBE - SEC. MAIN WELL _____
		64.	PLUG - IDLE NEEDLE
		65.	NEEDLE - IDLE ADJUSTING
		66.	SPRING - IDLE ADJ. NEEDLE
		67.	MAIN BODY ASSEMBLY

CLEANING

CLEANING MUST BE DONE WITH CARBURETOR DISASSEMBLED. DO NOT SOAK FUEL BOWL IN CARBURETOR CLEANER. USE A SPRAY TYPE CARBURETOR CLEANER. MAKE CERTAIN THE THROTTLE BORES ARE FREE OF CARBON AND VARNISH DEPOSITS. RINSE OFF IN SUITABLE SOLVENT. BLOW OUT ALL PASSAGES IN CASTINGS WITH COMPRESSED AIR AND CHECK CAREFULLY TO INSURE THOROUGH CLEANING OF OBSCURE AREAS. CAUTION: DO NOT SOAK PLASTIC FLOAT, SOLENOIDS, SWITCHS, ELECTRIC CHOKE COVER OR PARTS CONTAINING RUBBER MATERIALS IN CARBURETOR CLEANING SOLVENTS.

REASSEMBLY

REASSEMBLE IN REVERSE ORDER OF DISASSAMBLY. NOTE SPECIAL INSTRUCTIONS AND FOLLOW NUMERICAL OUTLINE IN MAKING ADJUSTMENTS.

SPECIAL INSTRUCTIONS

IDLE ADJUSTING NEEDLE (65) - TURN UNTIL LIGHTLY SEATED, THEN BACK OUT 2 TURNS. (DO NOT INSTALL PLUG AT THIS TIME).

CHECK BALL (56) - 2 BALLS ARE USED, ONE IS USED AS A WEIGHT.

PUMP RETURN SPRING (52) - INSTALL WITH SMALL DIAMETER AGAINST CARBURETOR BOWL.

BOWL COVER SCREWS (35) - TIGHTEN EVENLY IN STAGES TO 30 INCH LBS.

FUEL FILTER (33) - INSTALL FILTER WITH SOLID END AGAINST SPRING

CHOKE COVER (23) - INSTALL BUSHING (25) IN LOOP END OF COIL SPRING BEFORE INSTALLING ON PIN OF LEVER

TAMPER RESISTANT CHOKE COVER INSTALLATION - INSTALL CHOKE COMPONENTS MAKING SURE TAB ON RETAINER FITS IN NOTCH OF CHOKE COVER (NON ADJUSTABLE) BEFORE INSTALLING POP RIVETS AND BREAK AWAY SCREW.

THROTTLE CUT OUT SWITCH A/C MODELS - SET SWITCH SO THAT AIR CONDITIONING CLUTCH IS OPEN IN THROTTLE POSITION OF 10° BEFORE TO WIDE OPEN THROTTLE

QUADRAJETPARTS.com

INSTRUCTION SHEET
OFF VEHICLE CARBURETOR SERVICE
HOLLEY MODEL - 6520 V.O.S.

GENERAL EXPLODED VIEW
THE GENERAL DESIGN AND PARTS SHOWN WILL VARY TO INDIVIDUAL UNITS COVERED ON THIS INSTRUCTION SHEET

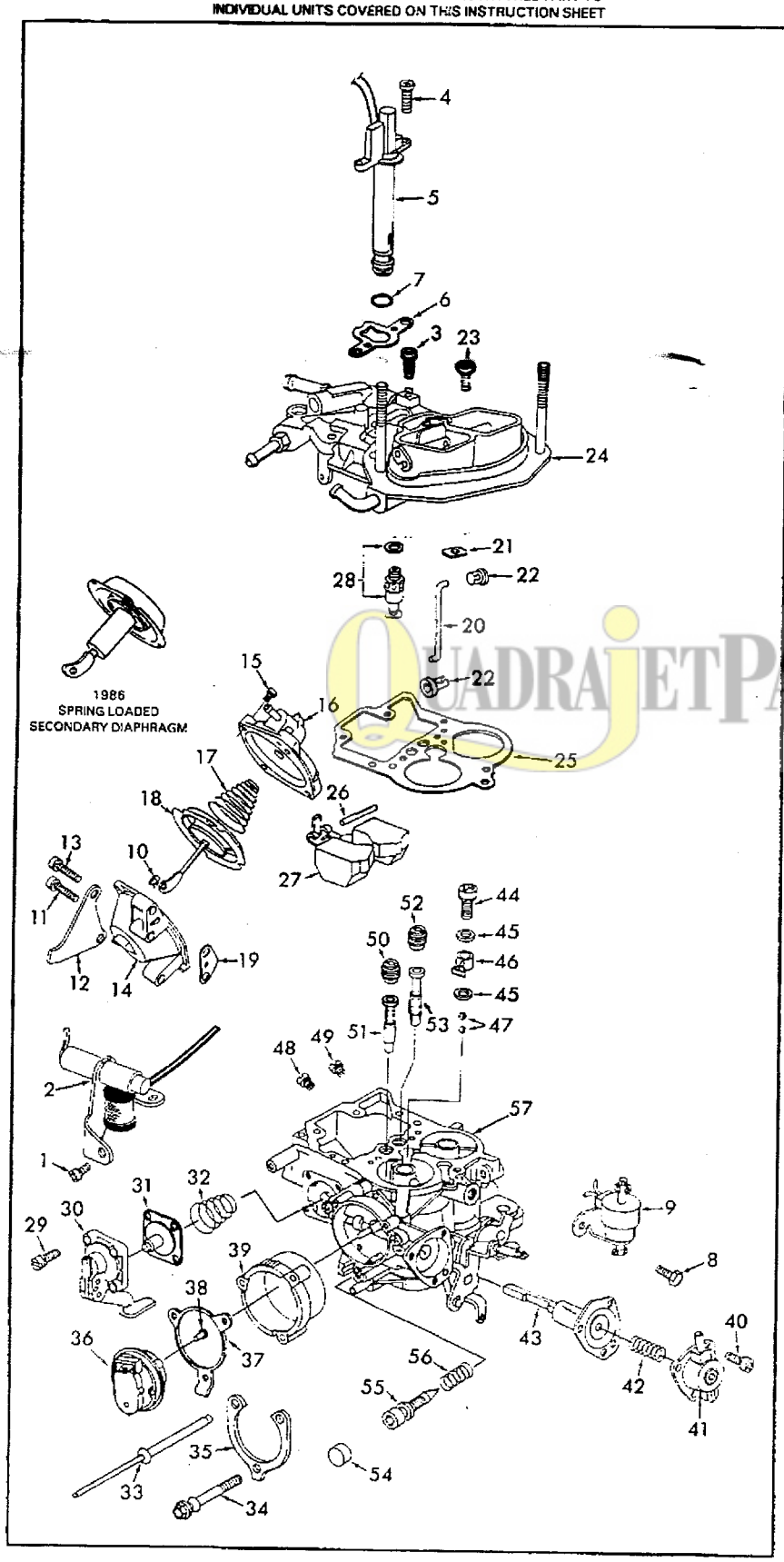

DISASSEMBLY

USE EXPLODED VIEW AS A GUIDE. THE NUMERICAL SEQUENCE MAY GENERALLY BE FOLLOWED TO DISASSEMBLE UNIT FAR ENOUGH TO PERMIT CLEANING AND INSPECTION. CAUTION: NOTE SIZES OF JETS AND MAIN WELL TUBES AND THEIR LOCATION FOR PROPER ASSEMBLY. (RECORD SIZES BELOW). SCREWS AND THREADS ARE METRIC, DO NOT SUBSTITUTE WITH U.S. THREADED SCREWS.

TAMPER RESISTANT CHOKE POP RIVETS CAN BE REMOVED BY DRILLING RIVET HEADS OFF. DRILL OR SAW A SLOT IN BREAK AWAY SCREW HEAD TO REMOVE. REMOVE CHOKE COMPONENTS THEN REMOVE REMAINDER OF RIVETS FROM HOUSING. TO REMOVE IDLE ADJUSTING NEEDLE CONCEALMENT PLUG, DRILL A 1/8" HOLE IN THE BASE AT A 45° ANGLE TOWARDS PLUG, ABOUT 1/4" IN FROM EDGE OF HOUSING. INSERT PUNCH INTO HOLE AND DRIVE PLUG OUT.

NOMENCLATURE

REF. NO.		REF NO.	
1.	SCREW & WASHERS (2) - VAC. SOLENOID	28.	NEEDLE & SEAT ASSY.
2.	SOLENOID ASSY. - VACUUM CONTROL	29.	SCREW & LOCKWASHER (4) - PUMP COVER
3.	SCREW - LOOM BRACKET, HOSE CLAMP	30.	PUMP COVER & LEVER ASSY.
4.	SCREW & LOCKWASHER (2) - SOLENOID ASSY.	31.	DIAPHRAGM ASSY. - PUMP
5.	SOLENOID ASSY. - MIXTURE CONTROL	32.	SPRING - DIAPHRAGM
6.	GASKET - SOLENOID	33.	POP RIVET (2) - CHOKE RETAINER
7.	O-RING - SOLENOID	34.	BREAKAWAY SCREW - CHOKE RETAINER
8.	SCREW & LOCKWASHER (2) - THROTTLE SOLENOID	35.	RETAINER - CHOKE COVER
9.	THROTTLE SOLENOID ASSY.	36.	CHOKE COVER & COIL ASSY.
10.	E-CLIP - SEC. DIAPHRAGM ROD	37.	RING - CHOKE GROUND
11.	SCREW & LOCKWASHER (2) - SEC. DIAPHRAGM PLATE	38.	BUSHING - COIL SPRING LOOP
12.	PLATE - SEC. DIAPHRAGM	39.	HOUSING - CHOKE COIL ASSY.
13.	SCREW & LOCKWASHER - SEC. DIAPHRAGM HOUSING	40.	SCREW & LOCKWASHER (3) - COVER
14.	SECONDARY DIAPHRAGM ASSY.	41.	COVER ASSY. - DIAPHRAGM
15.	SCREW & LOCKWASHER (4) - COVER	42.	SPRING - DIAPHRAGM
16.	COVER - SEC. DIAPHRAGM	43.	DIAPHRAGM ASSY. - CHOKE
17.	SPRING - SEC. DIAPHRAGM	44.	SCREW - PUMP DISC. NOZZLE
18.	DIAPHRAGM ASSY. - SECONDARY	45.	GASKET (2) - PUMP NOZZLE
19.	GASKET - SEC. DIAPHRAGM ASSY.	46.	NOZZLE - PUMP DISC.
20.	ROD - CHOKE OPERATING	47.	BALL (2) - PUMP DISCHARGE
21.	SEAL - CHOKE ROD	48.	JET - PRI. MAIN_____
22.	RETAINER (2) - CHOKE ROD	49.	JET - SEC. MAIN_____
23.	SCREW & LOCKWASHER (5) - BOWL COVER	50.	JET - PRI. HIGH SPEED BLEED_____
24.	BOWL COVER ASSY.	51.	TUBE - PRI. MAIN WELL_____
25.	GASKET - BOWL COVER	52.	JET - SEC. HIGH SPEED BLEED_____
26.	PIN - FLOAT	53.	TUBE - SEC. MAIN WELL_____
27.	FLOAT & LEVER ASSY.	54.	PLUG - IDLE ADJ. NEEDLE
		55.	NEEDLE - IDLE ADJUSTING
		56.	SPRING - IDLE NEEDLE
		57.	MAIN BODY ASSY.

CLEANING

CLEANING MUST BE DONE WITH CARBURETOR DISASSEMBLED. DO NOT SOAK FUEL BOWL IN CARBURETOR CLEANER. USE A SPRAY TYPE CARBURETOR CLEANER. MAKE CERTAIN THE THROTTLE BORES ARE FREE OF CARBON AND VARNISH DEPOSITS. RINSE OFF IN SUITABLE SOLVENT. BLOW OUT ALL PASSAGES IN CASTINGS WITH COMPRESSED AIR AND CHECK CAREFULLY TO INSURE THORDUGH CLEANING OF OBSCURE AREAS. CAUTION: DO NOT SOAK PLASTIC FLOAT, SOLENOIDS, SWITCHS, ELECTRIC CHOKE COVER OR PARTS CONTAINING RUBBER MATERIALS IN CARBURETOR CLEANING SOLVENTS.

REASSEMBLY

REASSEMBLE IN REVERSE ORDER OF DISASSAMBLY. NOTE SPECIAL INSTRUCTIONS AND FOLLOW NUMERICAL OUTLINE IN MAKING ADJUSTMENTS.

SPECIAL INSTRUCTIONS

IDLE ADJUSTING NEEDLE (55) - TURN UNTIL LIGHTLY SEATED, THEN BACK OUT 2 TURNS. (DO NOT INSTALL PLUG AT THIS TIME).

CHECK BALL (47) - 2 BALLS ARE USED, ONE IS USED AS A WEIGHT.

PUMP RETURN SPRING (32) - INSTALL WITH SMALL DIAMETER AGAINST CARBURETOR BOWL.

BOWL COVER SCREWS (23) - TIGHTEN EVENLY IN STAGES TO 30 INCH LBS.

CHOKE COVER (36) - INSTALL BUSHING (38) IN LOOP END OF COIL SPRING BEFORE INSTALLING ON PIN OF LEVER

TAMPER RESISTANT CHOKE COVER INSTALLATION - INSTALL CHOKE COMPONENTS MAKING SURE TAB ON RETAINER FITS IN NOTCH OF CHOKE COVER (NON ADJUSTABLE) BEFORE INSTALLING POP RIVETS AND BREAK AWAY SCREW.

QUADRAJETPARTS.com

ADJUSTMENTS

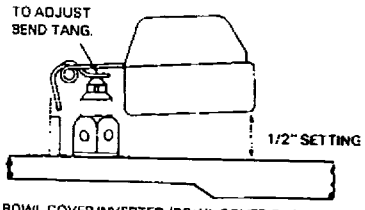

BOWL COVER INVERTED (BOWL COVER GASKET REMOVED). FLOAT RESTING ON NEEDLE VALVE OF ITS OWN WEIGHT. (DO NOT COMPRESS SPRING). MEASURE DISTANCE FROM FLOAT AT TOE END TO CASTING SURFACE.

(CHECK BOTH FLOATS)

DRY FLOAT LEVEL ADJUSTMENT FIG. 1

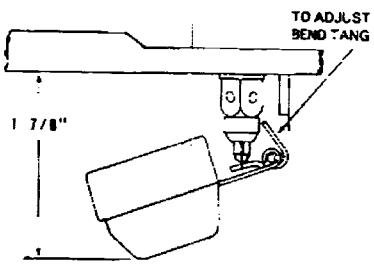

BOWL COVER HELD IN NORMAL POSITION WITH FLOAT HANGING FREELY. MEASURE DISTANCE FROM BOWL COVER GASKET SURFACE TO LOWEST PART OF FLOAT.

FLOAT DROP ADJUSTMENT FIG. 2

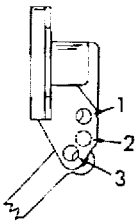

PUMP PIN POSITION HOLES. FIG. 3

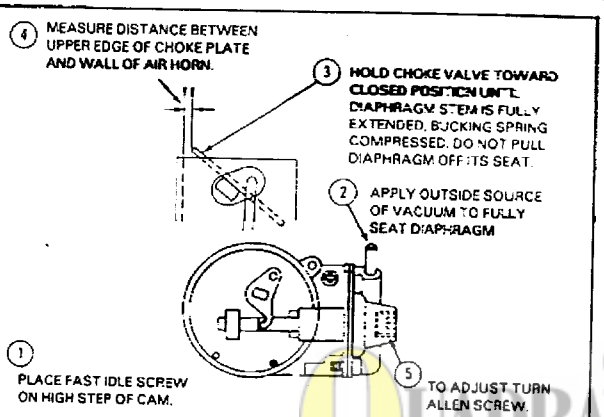

CHOKE PULLDOWN ADJUSTMENT FIG. 4

MODEL 5220 V.O.S.
ADJUSTMENT DATA TABLE

APPLICATION		FLOAT LEVEL	FLOAT DROP	PUMP PIN POSITION	CHOKE PULLDOWN
1985-86 CHRYSLER PRODUCTS					
1.6L ENG. CAN.	A/T	1/2"	1 7/8"	NO. 2	.055"
2.2L ENG. FED/CAN.	A/T	1/2"	1 7/8"	NO. 3	.095"
	M/T	1/2"	1 7/8"	NO. 3	.095"
1987 CHRYSLER PRODUCTS					
2.2L ENG. FED/CALIF.		31/64"	1 7/8"	--	.080"

MODEL 6520 V.O.S.
ADJUSTMENT DATA TABLE

APPLICATION		FLOAT LEVEL	FLOAT DROP	PUMP PIN POSITION	CHOKE PULLDOWN
1985-86 CHRYSLER PRODUCTS					
1.6L ENG. FED./CALIF.		1/2"	1 7/8"	NO. 2	.070"
2.2L ENG. FED./CALIF.	A/T	1/2"	1 7/8"	NO. 3	.075"
	M/T	1/2"	1 7/8"	NO. 3	.075"
1987 CHRYSLER PRODUCTS					
2.2L ENG. FED./CALIF.		31/64"	1 7/8"	--	.080"

QUADRAJETPARTS.com

©1984 TECHLIT CO.
Printed in U.S.A.

INSTRUCTION SHEET
OFF VEHICLE CARBURETOR SERVICE
HOLLEY MODEL-6520

50-596-4

(WITH MIXTURE CONTROL SOLENOID)

GENERAL EXPLODED VIEW

THE GENERAL DESIGN AND PARTS SHOWN WILL VARY TO INDIVIDUAL UNITS COVERED ON THIS INSTRUCTION SHEET.

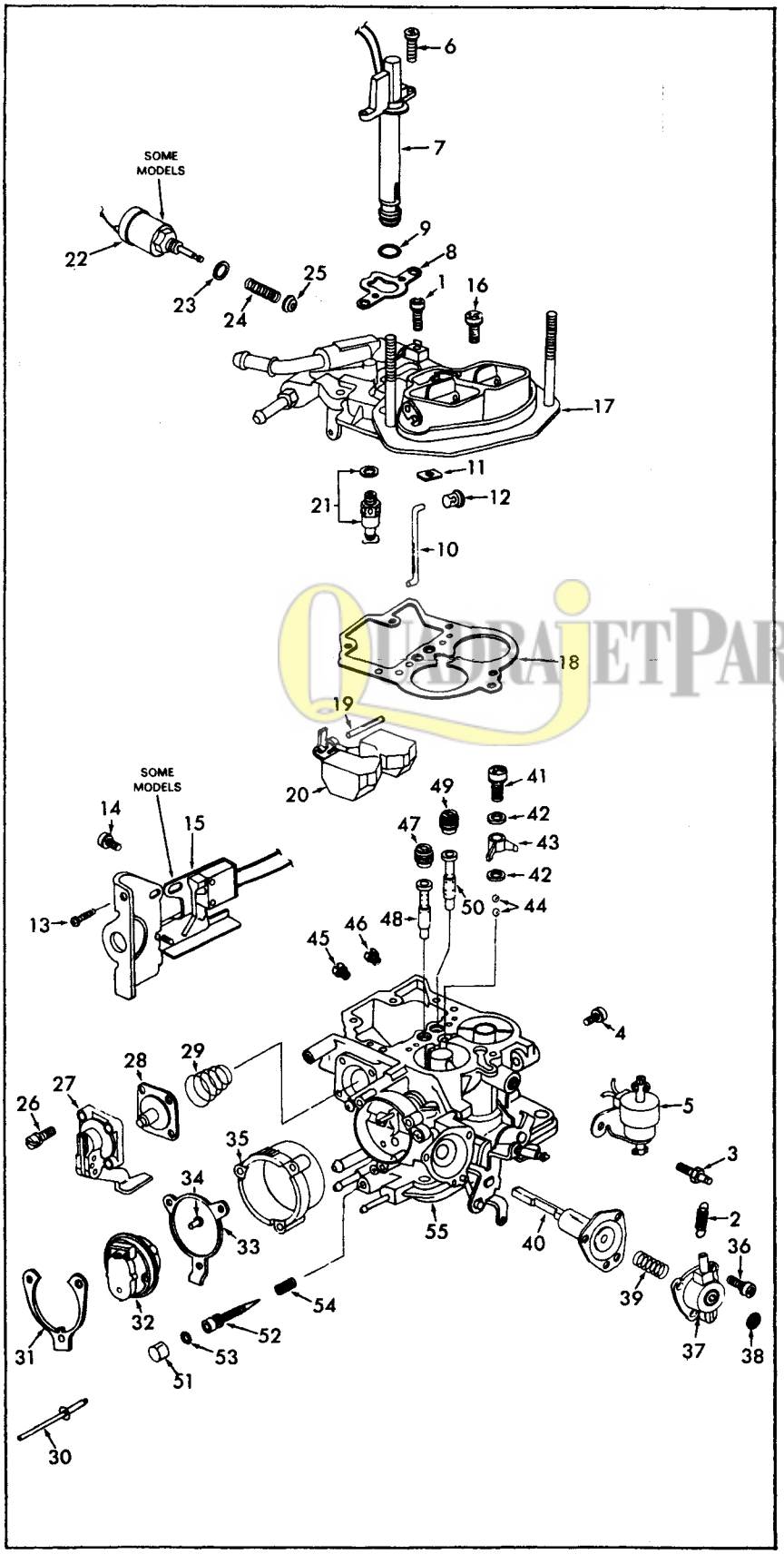

DISASSEMBLY

USE EXPLODED VIEW AS A GUIDE. THE NUMERICAL SEQUENCE MAY GENERALLY BE FOLLOWED TO DISASSEMBLE UNIT FAR ENOUGH TO PERMIT CLEANING AND INSPECTION. NOTE TO REMOVE BOWL VENT SOLENOID (22), COMPLETELY UNSCREW FROM BOWL COVER. THEN PULL UNIT OUT OF VENT VALVE (25). CHOKE RETAINER POP RIVETS (30) CAN BE REMOVED BY DRILLING RIVET HEADS OFF. REMOVE CHOKE COMPONENTS AND THEN PULL REMAINDER OF RIVETS FROM HOUSING. CHOKE ADJ. SCREW PLUG (38) AND IDLE ADJ. SCREW PLUG (51) CAN BE REMOVED BY CAREFULLY DRILLING A 1/8" HOLE IN PLUG'S, THEN USING A EASY OUT TO PULL PLUG'S FROM HOUSING. RECORD SIZES OF JETS AND MAIN WELL TUBES AND THEIR LOCATION FOR PROPER ASSEMBLY. MOST SCREWS AND THREADS ARE METRIC. DO NOT SUBSTITUTE WITH U. S. THREATED SCREWS.

MODELS WITH TAMPER RESISTANT SCREW RETAINING COVER ASSEMBLY (37). GRIND OR FILE HEAD OFF TO REMOVE COVER. USING PLIERS CAREFULLY REMOVE ADJUSTING SCREW FROM INSIDE COVER. REMOVE DRIVE NAIL FROM HEAD OF ADJUSTING SCREW THEN USING A ALLEN WRENCH REPLACE ADJUSTING SCREW IN COVER. TO REMOVE ROLL PIN IN FRONT OF IDLE MIXTURE NEEDLE (52), INSERT A SHARP PUNCH THROUGH HOLE AND TAP PIN OUT.

NOMENCLATURE

REF. NO.	REF. NO.
1. SCREW & WIRE CLAMP	28. DIAPHRAGM ASSY. - PUMP
2. SPRING - SECONDARY RETURN	29. SPRING - DIAPHRAGM
3. STUD & LKWSHR. - SEC. SPRING	30. RIVETS (3) - CHOKE RETAINER
4. SCREW & LKWSHR. - THROTTLE SOLENOID	31. RETAINER - CHOKE COVER
5. THROTTLE SOLENOID ASSY.	32. CHOKE COVER & COIL ASSY
6. SCREW & LKWSHR. (2) - SOLENOID	33. RING - CHOKE GROUND
7. SOLENOID ASSY. - MIXTURE CONTROL	34. BUSHING - COIL SPRING LOOP
8. GASKET - SOLENOID	35. HOUSING - CHOKE COIL ASSY.
9. O-RING - SOLENOID	36. SCREW & LKWSHR. (3) - COVER
10. ROD - CHOKE OPERATING	37. COVER ASSY. - DIAPHRAGM
11. SEAL - CHOKE ROD	38. PLUG - ADJ. SCREW
12. RETAINER (2) - CHOKE ROD	39. SPRING - DIAPHRAGM
13. SCREW & LKWSHR. (2) - BRACKET MICRO SWITCH	40. DIAPHRAGM ASSY. - CHOKE
14. SCREW - MICRO SWITCH	41. SCREW - PUMP DISC NOZZLE
15. MICRO SWITCH & BRACKET ASSY.	42. GASKET (2) - PUMP NOZZLE
16. SCREW & LKWSHR. (5) - BOWL COVER	43. NOZZLE - PUMP DISC
17. BOWL COVER ASSY.	44. BALL (2) - PUMP DISCHARGE
18. GASKET - BOWL COVER	45. JET - PRI. MAIN _____
19. PIN - FLOAT	46. JET - SEC. MAIN _____
20. FLOAT & LEVER ASSY.	47. JET - PRI. HIGH SPEED BLEED _____
21. NEEDLE & SEAT ASSY.	48. TUBE - PRI. MAIN WELL _____
22. SOLENOID - VENT VALVE	49. JET - SEC. HIGH SPEED BLEED _____
23. GASKET - SOLENOID	50. TUBE - SEC. MAIN WELL _____
24. SPRING - SOLENOID	51. PLUG - IDLE ADJ. NEEDLE
25. VALVE — VENT	52. NEEDLE - IDLE ADJUSTING
26. SCREW & LKWSHR. (4) - PUMP COVER	53. O-RING - IDLE NEEDLE
27. PUMP COVER & LEVER ASSY.	54. SPRING - IDLE NEEDLE
	55. MAIN BODY ASSY.

CLEANING

CLEANING MUST BE DONE WITH CARBURETOR DISASSEMBLED. SOAK PARTS LONG ENOUGH TO SOFTEN AND REMOVE ALL FOREIGN MATERIAL. USE A CARBURETOR CLEANING SOLVENT. MAKE CERTAIN THE THROTTLE BORES ARE FREE OF ALL CARBON AND VARNISH DEPOSITS. RINSE OFF IN SUITABLE SOLVENT. BLOW OUT ALL PASSAGES IN CASTINGS WITH COMPRESSED AIR AND CHECK CAREFULLY TO INSURE THOROUGH CLEANING OF OBSCURE AREAS. **CAUTION: DO NOT SOAK PLASTIC FLOAT, SOLENOIDS, ELECTRIC CHOKE COVER OR PARTS CONTAINING RUBBER MATERIALS IN CARBURETOR CLEANING SOVLENT.**

REASSEMBLY

REASSEMBLE IN REVERSE ORDER OF DISASSEMBLY. **NOTE SPECIAL INSTRUCTIONS AND FOLLOW NUMERICAL OUTLINE IN MAKING ADJUSTMENTS.**

SPECIAL INSTRUCTIONS

CHECK BALL (44) - 2 BALLS ARE USED, ONE IS USED AS A WEIGHT.

BOWL COVER SCREWS (16) - TIGHTEN EVENLY IN STAGES TO 30 INCH LBS.

PUMP RETURN SPRING (29) - INSTALL WITH SMALL DIAMETER AGAINST CARBURETOR BOWL.

IDLE ADJUSTING NEEDLE (52) - TURN IN UNTIL LIGHTLY SEATED, THEN BACK OUT 2 TURNS. (DO NOT INSTALL PLUG (51) AT THIS TIME).

CHOKE COVER (32) - INSTALL BUSHING (34) IN LOOP END OF COIL SPRING BEFORE INSTALLING ON PIN OF LEVER.

INSTALL CHOKE COMPONENTS MAKING SURE TAB ON RETAINER (31) FITS IN NOTCH OF CHOKE COVER (32) (NONE ADJUSTABLE) BEFORE INSTALLING POP RIVETS (30).

USE ENGINE DECAL AND CAR SERVICE MANUAL FOR CORRECT PROCEDURE IN SETTING SLOW AND FAST IDLE.

QuadrajetPart.com

ADJUSTMENTS

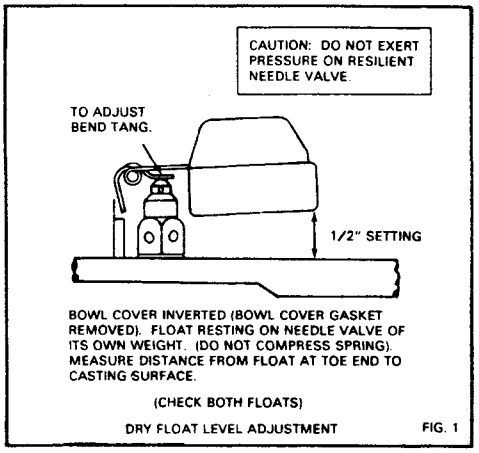

DRY FLOAT LEVEL ADJUSTMENT FIG. 1

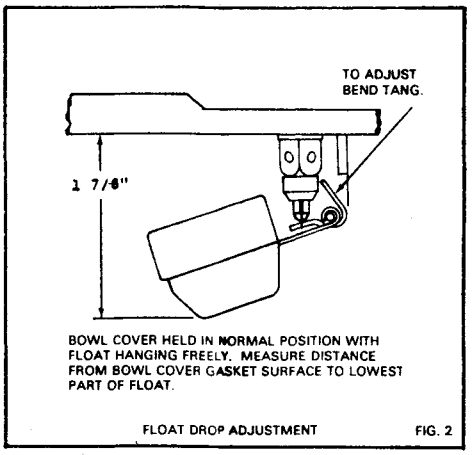

FLOAT DROP ADJUSTMENT FIG. 2

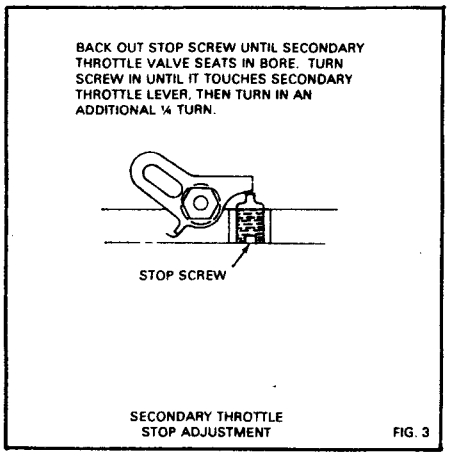

SECONDARY THROTTLE STOP ADJUSTMENT FIG. 3

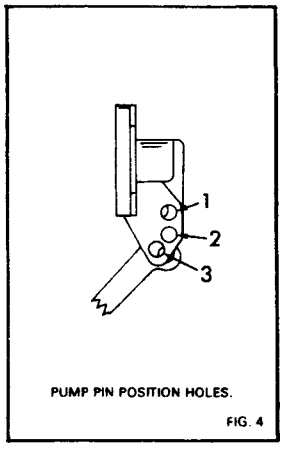

FIG. 4

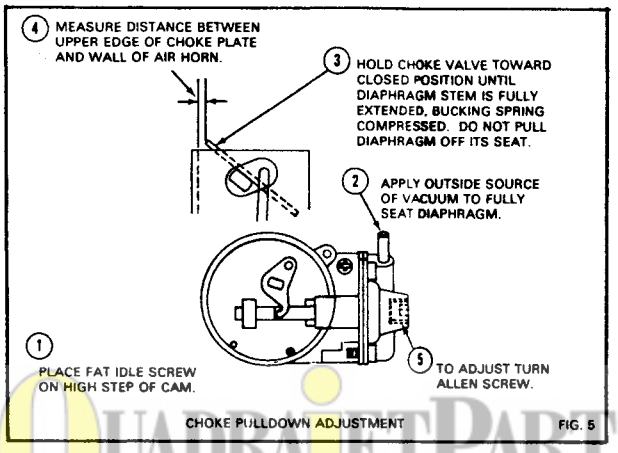

CHOKE PULLDOWN ADJUSTMENT FIG. 5

QUADRAJETPARTS.com

ADJUSTMENT DATA TABLE

APPLICATION		FLOAT LEVEL	FLOAT DROP	PUMP PIN POSITION	CHOKE PULLDOWN
CHRYSLER PRODUCTS					
1980					
1.7L ENG.	M/T	1/2"	1 7/8"	NO. 2	.120"
	A/T	1/2"	1 7/8"	NO. 2	.070"
1981					
1.7L ENG.	M/T	1/2"	1 7/8"	NO. 2	.070"
	A/T	1/2"	1 7/8"	NO. 2	.040"
2.2L ENG.	M/T	1/2"	1 7/8"	NO. 2	.030"
	A/T	1/2"	1 7/8"	NO. 2	.085"
1982					
1.7L ENG.	M/T	1/2"	1 7/8"	NO. 2	.080"
	A/T	1/2"	1 7/8"	NO. 2	.065"
2.2L ENG. FED.	M/T	1/2"	1 7/8"	No. 3	.085"
2.2L ENG. FED.	A/T	1/2"	1 7/8"	NO. 3	.100"
2.2L ENG. CALIF.	ALL/T	1/2"	1 7/8"	NO. 3	.085"
1983					
1.6L ENG. ALL	M/T	1/2"	1 7/8"	NO. 2	.070"
1/7L ENG. ALL	M/T	1/2"	1 7/8"	NO. 2	.045"
2.2L ENG. FED.	M/T	1/2"	1 7/8"	NO. 3	.070"
2.2L ENG. FED.	A/T	1/2"	1 7/8"	NO. 3	.080"
2.2L ENG. FED.ALT.	ALL/T	1/2"	1 7/8"	NO. 3	.080"
2.2L ENG. CALIF.	ALL/T	1/2"	1 7/8"	NO. 3	.070"
1984					
1.6L ENG.	M/T	1/2"	1 7/8"	NO. 2	.070"
	A/T	1/2"	1 7/8"	NO. 2	.055"
2.2L ENG. FED.	ALL/T	1/2"	1 7/8"	NO. 3	.080"
2.2L ENG. CALIF.	ALL/T	1/2"	1 7/8"	NO. 2	.080"
1985 1.6L ENG.		1/2"	1 7/8"	NO. 2	.070"

REV. 11/85