©1982 TECHLIT CO.
Printed in U.S.A.

INSTRUCTION SHEET
OFF VEHICLE CARBURETOR SERVICE
HOLLEY - MODELS 3160, 4150 4160

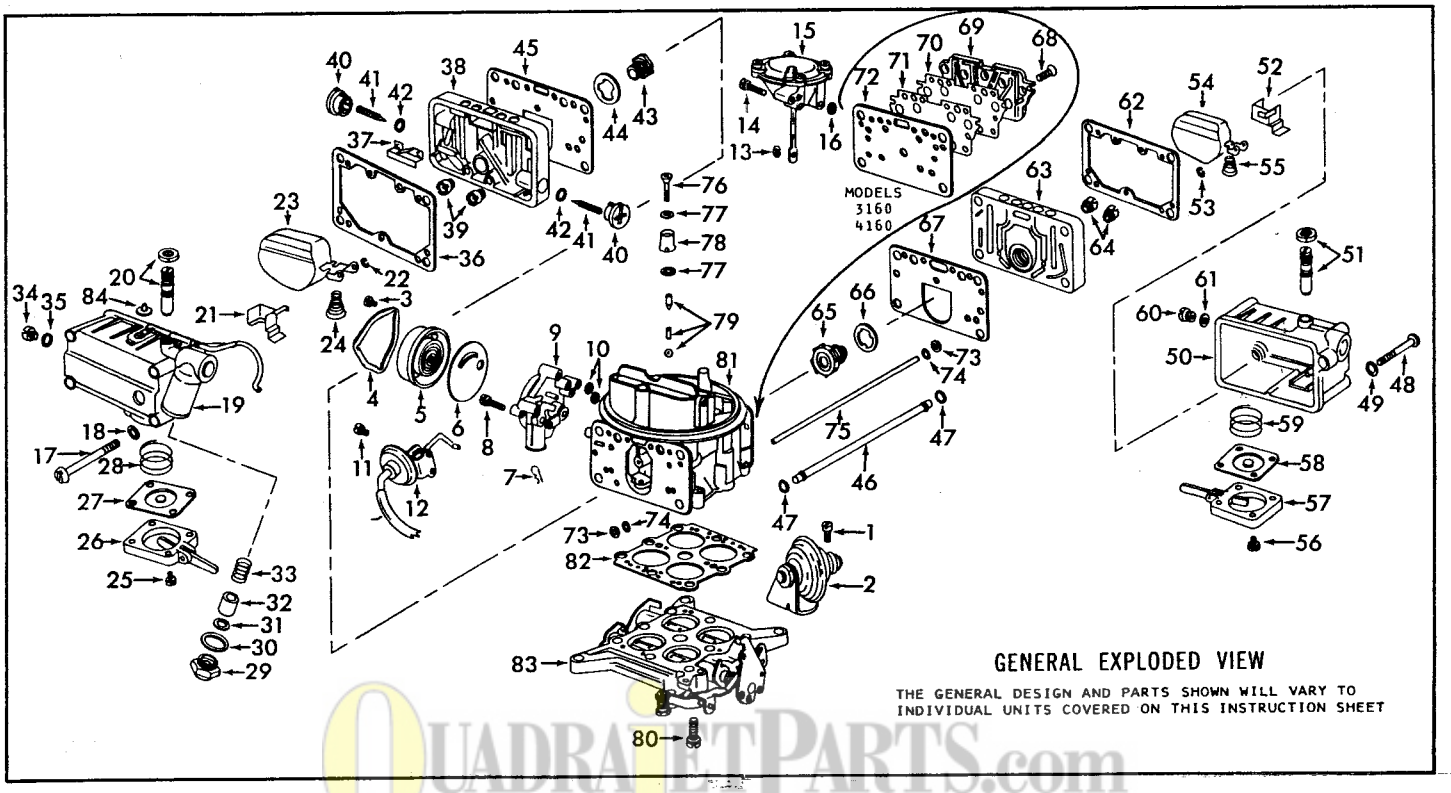

GENERAL EXPLODED VIEW

THE GENERAL DESIGN AND PARTS SHOWN WILL VARY TO INDIVIDUAL UNITS COVERED ON THIS INSTRUCTION SHEET

QUADRAJETPARTS.com

NOMENCLATURE

REF. NO.	
1.	SCREW & LOCKWASHER - DASHPOT
2.	DASHPOT & BRACKET ASSY.
3.	SCREW (3) - COVER CLAMP
4.	CLAMP - CHOKE COVER
5.	CHOKE COVER & SPRING ASSY.
6.	GASKET - CHOKE COVER
7.	RETAINER - CHOKE ROD
8.	SCREW & LOCKWASHER (3) - CHOKE HOUSING
9.	CHOKE HOUSING ASSY.
10.	GASKET - CHOKE HOUSING
11.	SCREW & LOCKWASHER (2) - CHOKE DIAPHRAGM ASSY.
12.	CHOKE DIAPHRAGM ASSY. (SOME MODELS)
13.	RETAINER - SEC. DIAPHRAGM LINK
14.	SCREW & LOCKWASHER (3) - DIAPH. HOUSING ASSY.
15.	DIAPH. HOUSING ASSY. - SECONDARY THROTTLE
16.	GASKET - SEC. DIAPH. HOUSING
17.	SCREW (4) - PRI. FUEL BOWL
18.	GASKET (4) - PRI. BOWL SCREW
19.	BOWL - PRI. FUEL
20.	NEEDLE & SEAT ASSY. - PRI.
21.	BAFFLE PLATE - PRI. N/S
22.	RETAINER - PRI. FLOAT
23.	FLOAT ASSY. - PRI.
24.	SPRING - PRI. FLOAT
25.	SCREW & LOCKWASHER (4) - PUMP COVER
26.	PUMP COVER ASSY.
27.	PUMP DIAPHRAGM ASSY.
28.	SPRING - PUMP
29.	FITTING - FUEL INLET
30.	GASKET - FITTING
31.	GASKET - FILTER
32.	FILTER - FUEL
33.	SPRING - FILTER
34.	PLUG - SIGHT LEVEL
35.	GASKET - PLUG
36.	GASKET - PRI. FUEL BOWL
37.	VENT BAFFLE - METERING BODY
38.	METERING BODY - PRI.
39.	JET (2) - PRI. MAIN
40.	CAP (2) - IDLE LIMITER (SOME MODELS)
41.	NEEDLE (2) - IDLE ADJ.
42.	SEAL (2) - IDLE NEEDLE
43.	POWER VALVE - PRI.
44.	GASKET - POWER VALVE
45.	GASKET - PRI. METERING BODY
46.	TUBE - FUEL LINE
47.	O-RING (2) - TUBE
48.	SCREW (4) - SEC. FUEL BOWL
49.	GASKET (4) - SEC. BOWL SCREW
50.	BOWL - SEC. FUEL
51.	NEEDLE & SEAT ASSY. - SEC.
52.	BAFFLE PLATE - SEC. N/S
53.	RETAINER - SEC. FLOAT
54.	FLOAT ASSY. - SEC.
55.	SPRING - SEC. FLOAT
56.	SCREW & LOCKWASHER (4) - PUMP COVER
57.	PUMP COVER ASSY. - (HI. PERF. CARB.)
58.	PUMP DIAPHRAGM ASSY - (HI. PERF.)
59.	SPRING - PUMP
60.	PLUG - SIGHT LEVEL
61.	GASKET - PLUG
62.	GASKET - SEC. FUEL BOWL
63.	METERING BODY - SEC.
64.	JET (2) - SEC. MAIN
65.	POWER VALVE - SEC. (SOME MODELS) OVERRUN VALVE ON TRUCKS STAMPED 215
66.	GASKET - VALVE
67.	GASKET - SEC. METERING BODY
68.	SCREW (6) - SEC. METERING BODY
69.	METERING BODY - SEC.
70.	GASKET -SEC. METERING BODY PLATE
71.	PLATE - SEC. METERING BODY
72.	GASKET - SEC. METERING BODY
73.	WASHER (2) - BALANCE TUBE (4160)(3160)
74.	O-RING (2) - BALANCE TUBE (4160)(3160)
75.	BALANCE TUBE (4160)(3160)
76.	SCREW - PUMP DISC. NOZZLE
77.	GASKET (2) - PUMP DISC. NOZZLE
78.	NOZZLE - PUMP DISC.
79.	NEEDLE VALVE - PUMP DISC. (OR BALL AND WEIGHT)
80.	SCREW & LOCKWASHER (8) - THROTTLE BODY
81.	MAIN BODY ASSY.
82.	GASKET - THROTTLE BODY
83.	THROTTLE BODY ASSY.
84.	AIR VENT VALVE OR CAP

DISASSEMBLY

USE EXPLODED VIEW AS A GUIDE. THE NUMERICAL SEQUENCE MAY GENERALLY BE FOLLOWED TO DISASSEMBLE UNIT FAR ENOUGH TO PERMIT CLEANING AND INSPECTION. NOTE: PRIMARY SIDE (CHOKE SIDE) AND SECONDARY SIDE PARTS ARE NOT ALWAYS IDENTICAL. BE SURE TO MARK PARTS TAKEN FROM PRIMARY SIDE. SECONDARY THROTTLE DIAPHRAGM ASSY. (15) - IF TAKEN APART BE CAREFUL NOT TO TEAR DIAPHRAGM WHEN TAKING OUT OR INSTALLING COVER SCREWS.

CLEANING

CLEANING MUST BE DONE WITH CARBURETOR DISASSEMBLED. SOAK PARTS LONG ENOUGH TO SOFTEN AND REMOVE ALL FOREIGN MATERIAL. USE A CARBURETOR CLEANING SOLVENT. MAKE CERTAIN THE THROTTLE BORES ARE FREE OF ALL CARBON AND VARNISH DEPOSITS. RINSE OFF IN SUITABLE SOLVENT. BLOW OUT ALL PASSAGES IN CASTINGS WITH COMPRESSED AIR AND CHECK CAREFULLY TO INSURE THOROUGH CLEANING OF OBSCURE AREAS. CAUTION: DO NOT SOAK PARTS WITH ATTACHED PLASTIC PARTS FOR A LONG PERIOD OF TIME. DO NOT SOAK ANY PARTS CONTAINING RUBBER OR DIAPHRAGM ASSEMBLIES.

REASSEMBLY

REASSEMBLE IN REVERSE ORDER OF DISASSEMBLY. NOTE SPECIAL INSTRUCTIONS AND FOLLOW NUMERICAL OUTLINE IN MAKING ADJUSTMENTS NECESSARY FOR CARBURETOR BEING SERVICED.

SPECIAL INSTRUCTIONS

THROTTLE BODY GASKET (82) - BE SURE HOLES ARE PROPERLY MATCHED TO THROTTLE BODY

POWER VALVE INSTALLATION
SOME KIT APPLICATIONS - PRI. & SEC. VALVES ARE THE SAME.
SOME KIT APPLICATIONS - PRI. SIDE, USE THE VALVE WITH THE SMALLEST IDENTIFYING NUMBER. (STAMPED ON SIDE OF VALVE.)
SPECIAL NOTE: HI. PERF. CARB.

CARB. NO.	R4778AAA	PRI. 8.5	SEC. NONE
	R4779AAA	PRI. 8.5	SEC. NONE
	R4780AAA	PRI. 6.5	SEC. 8.5

IDLE ADJ. NEEDLES (41) - TURN IN UNTIL LIGHTLY SEATED THEN BACK OUT 1 TURN. (DO NOT INSTALL IDLE LIMITER CAPS AT THIS TIME WHEN USED.)
NOTE: SOME LATE CARBURETORS HAVE A "BACKWARDS" IDLE ADJUSTMENT, TURN NEEDLES IN TO RICHEN THE MIXTURE, BACK NEEDLES OUT TO LEAN THE MIXTURE.

PRI. & SEC. FUEL BOWL - BEFORE INSTALLING MAKE DRY FLOAT LEVEL ADJUSTMENT.

O-RINGS - LUBRICATE LIGHTLY BEFORE INSTALLING.

ADJUSTMENTS

SIDE HUNG FLOAT

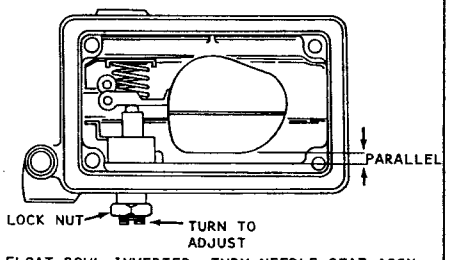

FLOAT BOWL INVERTED, TURN NEEDLE SEAT ASSY. UNTIL FLOAT SURFACE IS PARALLEL WITH THE SURFACE DIRECTLY BELOW THE FLOAT. TIGHTEN LOCK NUT.

CENTER HUNG FLOAT

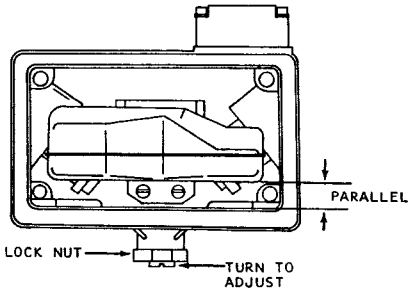

FLOAT BOWL INVERTED, TURN NEEDLE SEAT ASSY. UNTIL FLOAT SURFACE IS PARALLEL WITH THE SURFACE DIRECTLY BELOW THE FLOAT. TIGHTEN LOCK NUT.

DRY FLOAT LEVEL ADJUSTMENTS

FIG. 1 FIG. 2

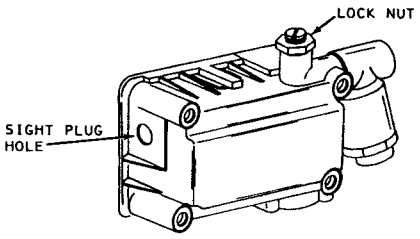

1. CAR SETTING ON LEVEL SURFACE & ENGINE RUNNING.
2. REMOVE SIGHT LEVEL PLUG FROM BOWL.
3. ADJUST NEEDLE SEAT ASSY. SO FUEL LEVEL WILL BE AT BOTTOM EDGE OF SIGHT PLUG HOLE. (PLUS OR MINUS 1/32" TOLERANCE.)
4. TIGHTEN LOCK NUT.

WET FLOAT LEVEL ADJUSTMENT FIG. 3

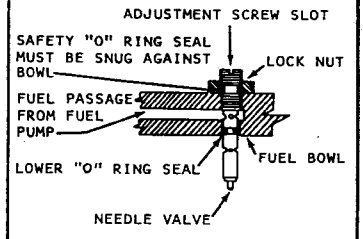

THE EXCLUSIVE SEALING FEATURES OF THIS ASSEMBLY PROVIDE SAFE ADJ. OF FUEL LEVEL WHILE ENGINE IS RUNNING.

SAFETY SEAL ADJUSTABLE FUEL VALVE FIG. 4

TRUCK APPLICATIONS TUBE IS EQUALLY PROJECTED IN BOTH PRIMARY AND SECONDARY BOWLS.

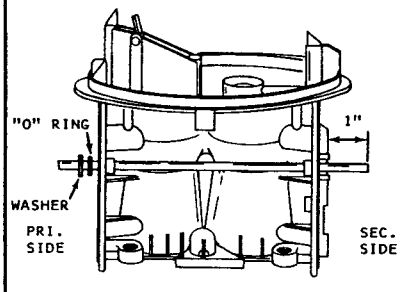

PASSENGER CARS TUBE IS PROJECTED 1 INCH FROM SECONDARY METERING BODY.

BALANCE TUBE POSITION FIG. 5

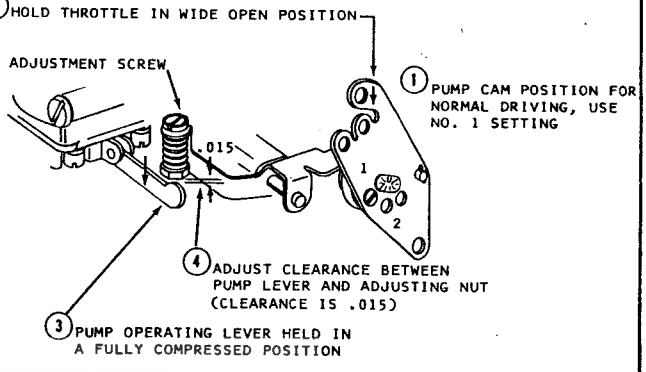

PRI. & SEC. PUMP ADJUSTMENT FIG. 6

THROTTLE VALVES FULLY CLOSED, MEASURE DISTANCE BETWEEN VENT VALVE AND SEAT.

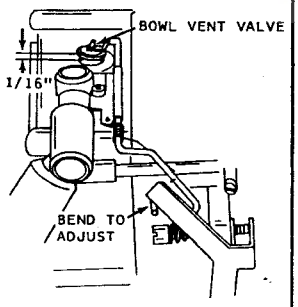

BOWL VENT ADJUSTMENT FIG. 7

ALIGN MARK ON STAT COIL WITH INDEX ON CHOKE HOUSING. ALLOWABLE VARIATIONS, 2 MARKS EITHER WAY FROM INDEX.

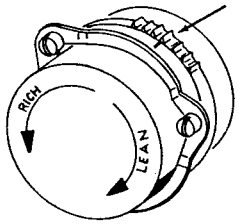

AUTOMATIC CHOKE SETTING FIG. 8

2 CHOKE HELD TOWARD CLOSED POSITION, MEASURE BETWEEN UPPER EDGE OF CHOKE VALVE AND AIR HORN WALL.

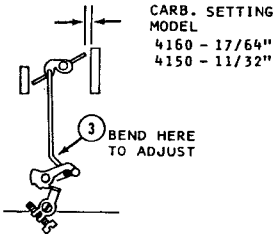

THROTTLE HELD WIDE OPEN

UNLOADER ADJUSTMENT FIG. 9

SECONDARY THROTTLE STOP SCREW, BACK OUT UNTIL SECONDARY THROTTLE PLATES ARE CLOSED. TURN SCREW IN UNTIL IT CONTACTS STOP, THEN TURN SCREW IN 1/2 - 3/4 TURNS MORE.

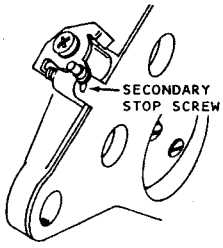

SECONDARY THROTTLE STOP ADJUSTMENT FIG. 10

1 OPEN THROTTLE TO CLEAR FAST IDLE CAM.

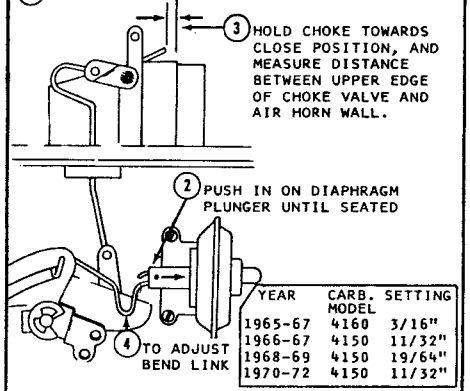

YEAR	CARB. MODEL	SETTING
1965-67	4160	3/16"
1966-67	4150	11/32"
1968-69	4150	19/64"
1970-72	4150	11/32"

VACUUM BREAK ADJUSTMENT. FIG. 11

ENGINE AT OPERATING TEMP. AND CHOKE WIDE OPEN, ADJUST IDLE MIXTURE NEEDLES TO A SMOOTH IDLE. ADJUST IDLE STOP SCREW TO 500-550 R.P.M. OR FOLLOW SETTING ON ENGINE DECAL.

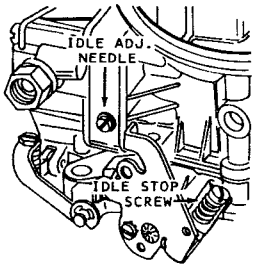

SLOW IDLE ADJUSTMENT FIG. 12

PLACE FAST IDLE SCREW ON HIGH STEP OF FAST IDLE CAM AND SET TO 1600-1800 R.P.M. OR FOLLOW SETTING ON ENGINE DECAL.

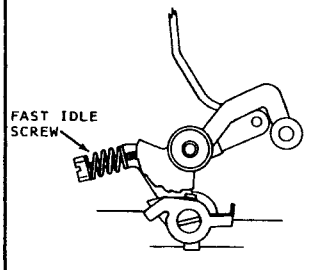

FAST IDLE ADJUSTMENT FIG. 13

2 DEPRESS PLUNGER STEM AND MEASURE DISTANCE BETWEEN END OF STEM AND THROTTLE ARM.

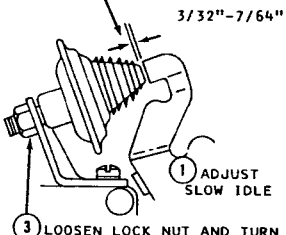

3 LOOSEN LOCK NUT AND TURN UNIT TO ADJUST. TIGHTEN NUT.

(DASHPOT)
SLOW CLOSING THROTTLE ADJ.
FIG. 14

CADILLAC PARTS.COM

1971 TECHLIT CO.
Printed in U.S.A.

INSTRUCTION SHEET

HOLLEY CARBURETOR—MODEL 2300,-C

HIGH PERFORMANCE THREE 2 BARREL

USE THIS INSTRUCTION SHEET WITH SHEET NO. 50-301

SECONDARY CARBURETORS (FRONT & REAR) ARE SIMILAR IN DESIGN TO PRIMARY CARBURETOR (CENTER), EXCEPT THAT NO CHOKE VALVE, POWER ENRICHMENT SYSTEM, OR ACCELERATING PUMP IS USED.

SECONDARY DIAPHRAGM HOUSING ASSEMBLY - REMOVE FROM CARBURETOR BODY AS AN ASSEMBLY. CHECK FOR LEAKS BY PRESSING IN ON ROD AND HOLDING FINGER OVER VACUUM HOLE, THEN RELEASE ROD. ROD SHOULD REMAIN IN; IF ROD MOVES OUT, REPLACE DIAPHRAGM. DO NOT SOAK DIAPHRAGM IN SOLVENT OR CARBURETOR CLEANER.

FLOAT LEVEL ADJUSTMENT

STEP 1 - WITH FUEL BOWL IN AN INVERTED POSITION, MEASURE DISTANCE FROM TOP OF FLOAT AT ENDS TO THE INNER SURFACE OF FUEL BOWL. TO ADJUST TURN ADJUSTING SCREW, THEN TIGHTEN LOCKNUT SNUGLY. (SEE DATA TABLE FOR MEASUREMENT.) *1970 AND LATER CENTER FLOAT IN INVERTED BOWL.

STEP 2 - WITH CAR ON A LEVEL FLOOR, BRING ENGINE TO NORMAL OPERATING TEMPERATURE. REMOVE PLUG FROM SIDE OF BOWL AND ADJUST RUNNING FUEL LEVEL TO BE AT LOWER EDGE OF INSPECTION HOLE. NOTE: WHEN CHECKING FUEL LEVEL ON SECONDARY CARBURETORS, PRIMARY THROTTLE VALVES SHOULD BE OPENED SLIGHTLY AND SECONDARY CARBURETOR THROTTLE HAND OPERATED TO ASSURE STABILIZED FUEL LEVEL IN SECONDARY FLOAT BOWL.

QUADRAJETPARTS.com

UNLOADER ADJUSTMENT

PRIMARY CARBURETOR - HOLD THROTTLE LEVER IN WIDE OPEN POSITION, MOVE CHOKE VALVE TOWARD CLOSED POSITION. MEASURE DISTANCE BETWEEN LOWER EDGE OF CHOKE VALVE AND AIR HORN WALL. ADJUST BY BENDING CHOKE ROD AT OFFSET BEND. (SEE DATA TABLE FOR MEASUREMENT.)

VACUUM BREAK ADJUSTMENT

PRIMARY CARBURETOR - HOLD VACUUM BREAK STEM IN AGAINST STOP. CLOSE CHOKE VALVE BY PRESSING ON INTERMEDIATE CHOKE LEVER SO VACUUM BREAK CONNECTOR ROD IS AT END OF SLOT IN LEVER. MEASURE DISTANCE BETWEEN LOWER EDGE OF CHOKE VALVE AND AIR HORN WALL. ADJUST BY BENDING VACUUM BREAK CONNECTOR ROD. (SEE DATA TABLE FOR MEASUREMENT.)

DATA TABLE

MAKE		DRY FLOAT LEVEL	PUMP ADJ.	BOWL VENT ADJ.	UNLOADER ADJ.	VACUUM BREAK ADJ.	SLOW IDLE R.P.M. ADJ. S/T	SLOW IDLE R.P.M. ADJ. A/T-DR.	FAST IDLE R.P.M. ADJ.	
CORVETTE										
1967-68		3/8"	.015	--	1/4"	1/4"	750	600	2200	H/S
1969		3/8"	.015	3/32"	1/4"	1/4"	400	H.P.ENG.		
							800	600	2200	H/S
							435	H.P.ENG.		
							750	750	2200	H/S
CHRYSLER CORP.										
1969	S/T	9/16"	.015	3/32"	5/32"	9/64"	1000		2200	2/S
	A/T							900N.	1800	2/S
FRONT & REAR	ALL/T	3/4"	--	--	--	--	--	--	--	--
1970	A/T	*	.015	3/32"	5/32"	1/16"		900N.	1800	2/S
	S/T	*	.015	3/32"	5/32"	9/64"	900		2200	2/S
1971 340"ENG.	S/T	*	.015	3/32"	5/32"	9/64"	950		2600	H/S
	A/T	*	.015	3/32"	5/32"	3/64"		1000N.	2800	H/S
440"ENG.	S/T	*	.015	3/32"	5/32"	9/64"	900		1800	H/S
	A/T	*	.015	3/32"	5/32"	1/16"		900N.	1800	H/S

INSTRUCTION SHEET

HOLLEY CARBURETOR—MODEL 3160,4150,-C,4160

HIGH PERFORMANCE

USE THIS INSTRUCTION SHEET WITH SHEET NO. 50-312

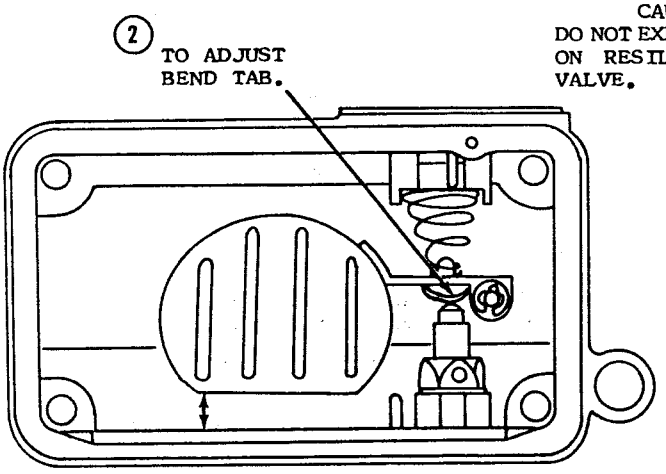

END HINGED FLOAT ADJUSTMENT

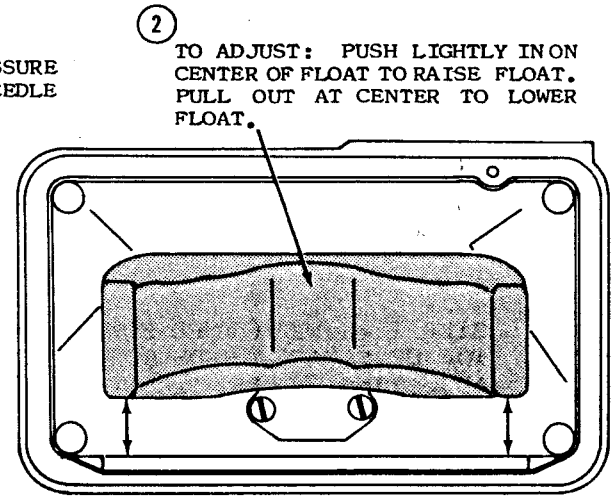

SIDE HINGED FLOAT ADJUSTMENT

QUADRAJETPARTS.COM

1 FUEL BOWL INVERTED, WEIGHT OF FLOAT RESTING ON SEATED NEEDLE. MEASURE DISTANCE BETWEEN TOE OF FLOAT AND SURFACE OF BOWL DIRECTLY BELOW THE FLOAT.

1 FUEL BOWL INVERTED, WEIGHT OF FLOAT RESTING ON SEATED NEEDLE. MEASURE DISTANCE BETWEEN TOP OF FLOAT AND SURFACE OF BOWL DIRECTLY BELOW THE FLOAT. CHECK AT BOTH ENDS.

DATA TABLE

NON-ADJUSTABLE NEEDLE AND SEAT DRY FLOAT SETTINGS

MAKE	PRIMARY FLOAT SETTING	SECONDARY FLOAT SETTING
1965-66 CHEVELLE 8 CYL. 425 H.P. 396" ENG.	3/8"	1/2"
1966 CHEVELLE 8 CYL. 375 H.P. 396" ENG.	11/32"	15/32"
1966-67 CHEVELLE 8 CYL. 325 & 350 H.P. 327" ENG.	5/16"	9/32"
1967 CHEVELLE 8 CYL. 355 H.P. 396" ENG.	11/32"	11/32"
1964 CHRYSLER 8 CYL. HEMI-CHARGER 426" ENG.	7/16"	9/16"
1967-70 CHRYSLER 8 CYL. 383" & 440" ENG.	1/4"	9/32"
1967 COMET 8 CYL. HI RISER RACE ENG. 427" ENG.	3/8"	1/2"
1965 CORVETTE 8 CYL. 427" ENG.	3/8"	1/2"
1966 CORVETTE 8 CYL. 390 & 450 H.P. 427" ENG.	11/32"	15/32"
1967 CORVETTE 8 CYL. 300 & 350 H.P. 327" ENG.	5/16"	11/32"
390 H.P. 427" ENG.	5/16"	11/32"
1964 DODGE 8 CYL. HEMI-CHARGER 426" ENG.	7/16"	9/16"
1967-69 DODGE 8 CYL. 383" & 440" ENG.	1/4"	9/32"
1964-68 FORD 8 CYL. HI RISER RACE ENG. 427" ENG.	3/8"	1/2"
1965-67 MUSTANG 8 CYL. COBRA, GT350 289" ENG.	3/8"	1/2"
1964 PLYMOUTH 8 CYL. HEMI-CHARGER 426" ENG.	7/16"	9/16"
1967-69 PLYMOUTH 8 CYL. 383" & 440" ENG.	1/4"	9/32"