©1983 TECHLIT CO
Printed in USA

INSTRUCTION SHEET
OFF VEHICLE CARBURETOR SERVICE
HOLLEY MODELS-4165, 4175

50-478-1

GENERAL EXPLODED VIEW

THE GENERAL DESIGN AND PARTS SHOWN WILL VARY TO INDIVIDUAL UNITS COVERED ON THIS INSTRUCTION SHEET.

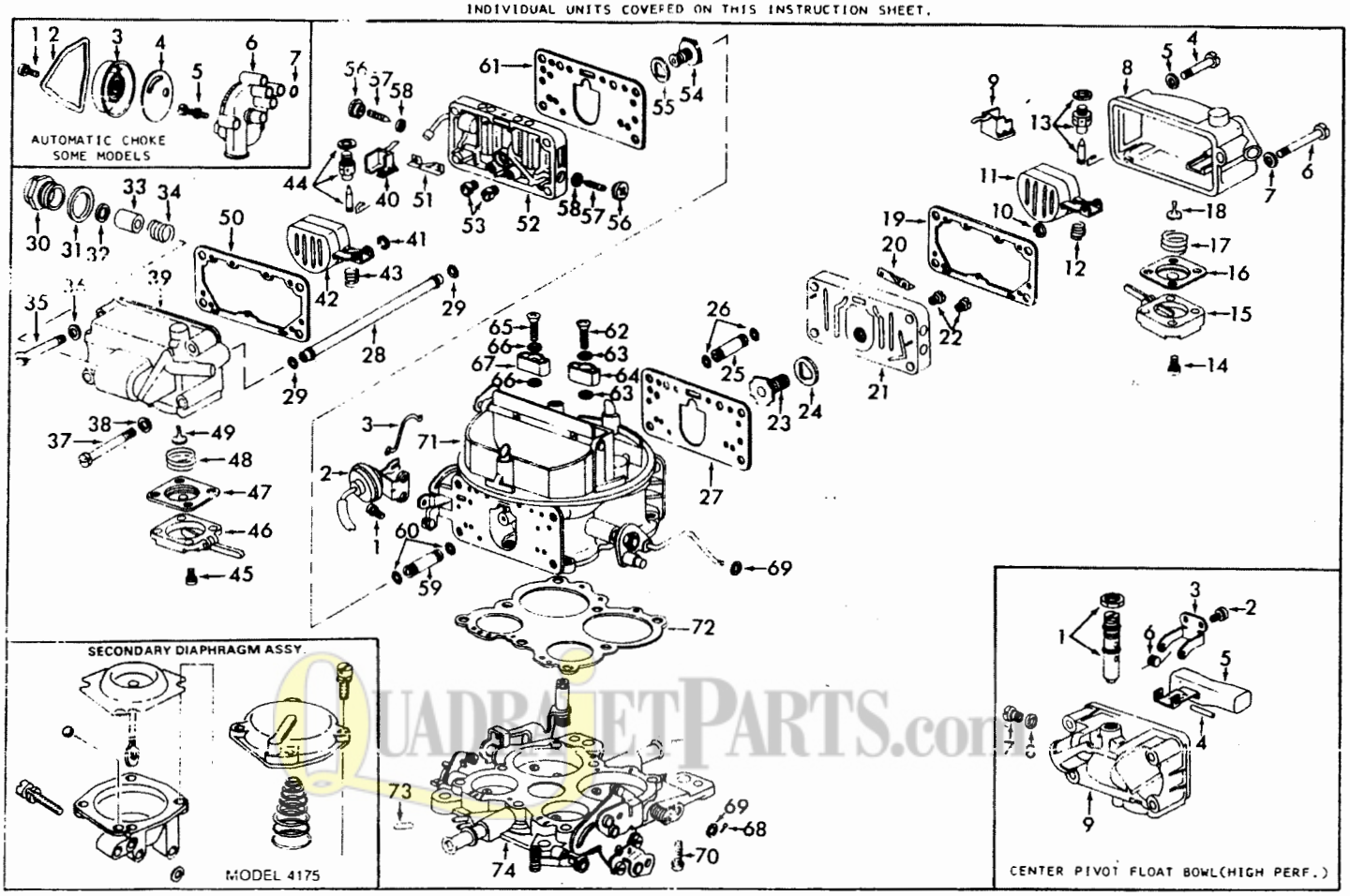

QUADRAJETPARTS.com

NOMENCLATURE

REF. NO.	REF. NO.
1. SCREW & LOCKWASHER (2)— CHOKE DIAPHRAGM ASSY.	38. GASKET (2)— FUEL BOWL SCREW
2. CHOKE DIAPHRAGM ASSY.	39. FUEL BOWL ASSY.— PRI.
3. LINK— CHOKE DIAPHRAGM	40. BAFFLE PLATE— PRI.
4. SCREW (SHORT)(2)— SEC. FUEL BOWL	41. RETAINER— FLOAT
5. GASKET (2)— FUEL BOWL SCREW	42. FLOAT & LEVER ASSY.— PRI.
6. SCREW (LONG)(2)— SEC. FUEL BOWL	43. SPRING— PRI. FLOAT
7. GASKET (2)— FUEL BOWL SCREW	44. NEEDLE, SEAT & GASKET ASSY. PRI.
8. FUEL BOWL ASSY.— SEC.	45. SCREW & LOCKWASHER (4)— PRI. PUMP COVER
9. BAFFLE PLATE— SEC.	46. COVER— PRI. PUMP
10. RETAINER— FLOAT	47. PUMP DIAPHRAGM ASSY.— PRI. (SMALL)
11. FLOAT & LEVER ASSY.— SEC.	48. SPRING— PRI. DIAPHRAGM RETURN
12. SPRING— SEC. FLOAT	49. VALVE— PRI. PUMP CHECK
13. NEEDLE, SEAT & GASKET ASSY. SEC.	50. GASKET— PRI. FUEL BOWL
14. SCREW & LOCKWASHER (4)— SEC. PUMP COVER	51. BAFFLE— PRI. METERING BODY VENT
15. COVER— SEC. PUMP	52. METERING BODY ASSY.— PRI.
16. PUMP DIAPHRAGM ASSY.— SEC. (LARGE)	53. JET (2)— PRI. MAIN
17. SPRING— SEC. DIAPHRAGM RETURN	54. VALVE— PRI. POWER
18. VALVE— SEC. PUMP CHECK	55. GASKET— PRI. POWER VALVE
19. GASKET— SEC. FUEL BOWL	56. CAP (2)— IDLE LIMITER
20. BAFFLE— SEC. METERING BODY VENT	57. NEEDLE (2)— IDLE ADJUSTING
21. METERING BODY ASSY.— SEC.	58. SEAL (2)— IDLE ADJ. NEEDLE
22. JETS— SEC. MAIN	59. TUBE— PRI. PUMP PASSAGE
23. VALVE— SEC. POWER	60. O RING (2)— PASSAGE TUBE
24. GASKET— SEC. POWER VALVE	61. GASKET— PRI. METERING BODY.
25. TUBE— SEC. PUMP PASSAGE	62. SCREW— SEC. PUMP DISC. NOZZLE
26. O-RING (2)— PASSAGE TUBE	63. GASKET (2)— SCREW
27. GASKET— SEC. METERING BODY	64. NOZZLE— SEC. PUMP DISCHARGE (LARGE DUMP HOLES)
28. TUBE— FUEL LINE	65. SCREW— PRI. PUMP DISC. NOZZLE
29. O-RING (2)— FUEL LINE TUBE	66. GASKET (2)— SCREW
30. FITTING— FUEL INLET	67. NOZZLE— PRI. PUMP DISCHARGE (SMALL DUMP HOLES)
31. GASKET— INLET FITTING	68. COTTER PIN— SEC. CONNECTING ROD
32. GASKET— FUEL FILTER	69. WASHER (2)— SEC. CONNECTING ROD
33. FILTER— FUEL	70. SCREW & LOCKWASHER (8)— THROTTLE BODY
34. SPRING— FUEL FILTER	71. MAIN BODY ASSY.
35. SCREW (SHORT)(2)— PRI. FUEL BOWL	72. GASKET— THROTTLE BODY
36. GASKET (2)— FUEL BOWL SCREW	73. PLUG— VACUUM TUBE
37. SCREW (LONG)(2)— PRI. FUEL BOWL	74. THROTTLE BODY ASSY.

DISASSEMBLY

USE EXPLODED VIEW AS A GUIDE. THE NUMERICAL SEQUENCE MAY GENERALLY BE FOLLOWED TO DISASSEMBLE UNIT FAR ENOUGH TO PERMIT CLEANING AND INSPECTION. NOTE: PRIMARY AND SECONDARY PARTS ARE NOT ALWAYS IDENTICAL. BE SURE TO MARK PARTS TAKEN FROM PRIMARY SIDE.

CLEANING

CLEANING MUST BE DONE WITH CARBURETOR DISASSEMBLED. SOAK PARTS LONG ENOUGH TO SOFTEN AND REMOVE ALL FOREIGN MATERIAL. USE A CARBURETOR CLEANING SOLVENT. MAKE CERTAIN THE THROTTLE BORES ARE FREE OF ALL CARBON AND VARNISH DEPOSITS. RINSE OFF IN SUITABLE SOLVENT. BLOW OUT ALL PASSAGES IN CASTINGS WITH COMPRESSED AIR AND CHECK CAREFULLY TO INSURE THOROUGH CLEANING OF OBSCURE AREAS. CAUTION: DO NOT SOAK PARTS WITH ATTACHED PLASTIC PARTS FOR A LONG PERIOD OF TIME. DO NOT SOAK ANY PARTS CONTAINING RUBBER OR DIAPHRAGM ASSEMBLIES.

REASSEMBLY

REASSEMBLE IN REVERSE ORDER OF DISASSEMBLY. NOTE SPECIAL INSTRUCTIONS AND FOLLOW NUMERICAL OUTLINE IN MAKING ADJUSTMENTS NECESSARY FOR CARBURETOR BEING SERVICED.

NOMENCLATURE

CENTER PIVOT FLOAT BOWL(HIGH PERF.)

REF. NO.	REF. NO.
1. NEEDLE & SEAT ASSY.— ADJUSTABLE	6. SPRING— FLOAT(PRI. & SEC. ARE DIFFERENT)
2. SCREW & LOCKWASHER— FLOAT BRACKET	7. PLUG— FUEL LEVEL CHECK
3. BRACKET— FLOAT PIN	8. GASKET— CHECK PLUG
4. PIN— FLOAT	9. FUEL BOWL
5. FLOAT & LEVER ASSY.— (PRI. & SEC. ARE DIFFERENT)	

NOMENCLATURE

AUTOMATIC CHOKE SOME MODELS

REF. NO.	REF. NO.
1. SCREW(3)— CHOKE COVER RETAINER	5. SCREW & LOCKWASHER— CHOKE HOUSING
2. RETAINER— CHOKE COVER	6. CHOKE HOUSING ASSY.
3. COVER ASSY.— CHOKE THERMOSTAT	7. GASKET— CHOKE HOUSING
4. GASKET— CHOKE COVER	

SPECIAL INSTRUCTIONS ARE ON NEXT PAGE

SPECIAL INSTRUCTIONS

O-RINGS— LUBRICATE LIGHTLY WITH OIL BEFORE INSTALLING.

VITON NEEDLE & SEAT ASSY.— DO NOT USE EXOTIC FUELS OR ADDITIVES SUCH AS ALCOHOL, BENZINE OR ACETONE.

POWER VALVES (23)(54)— PRIMARY VALVE HAS SMALL HEAD ON STEM 7.5" SETTING. SECONDARY VALVE HAS LARGE HEAD ON STEM 6.5" SETTING.

NON ADJUSTABLE NEEDLE & SEAT ASSY.(13)(44)— INSTALL NEEDLE SEAT WITH SMALL ORIFICE ON PRIMARY SIDE AND NEEDLE SEAT WITH LARGE ORIFICE ON SECONDARY SIDE.

IDLE ADJUSTING NEEDLES (57)— TURN IN UNTIL LIGHTLY SEATED THEN BACK OUT 1 TURN. (DO NOT INSTALL LIMITER CAPS AT THIS TIME IF USED.) NOTE: SOME CARBURETORS HAVE A "BACKWARDS" IDLE ADJUSTMENT, TURN NEEDLES IN TO RICHEN THE MIXTURE, BACK NEEDLES OUT TO LEAN THE MIXTURE.

PUMP INLET CHECK VALVE (18)(49)—TO INSTALL LUBRICATE TIP OF NEW VALVE AND INSERT IN CENTER HOLE OF PUMP CAVITY. USE NEEDLE NOSE PLIERS AND PULL THRU FROM FUEL BOWL SIDE UNTIL FULLY SEATED. CUT OFF VALVE TIP AT RETAINING SHOULDER.

PUMP DIAPHRAGM RETURN SPRING (17)(48)—INSTALL LARGE OPEN END OF SPRING OVER RUBBER INLET CHECK VALVE. BE SURE TO INSTALL LARGE DIAPHRAGM & HOUSING ON SECONDARY SIDE.

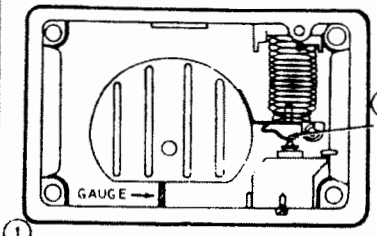

MODEL 4165
FLOAT LEVEL SETTING
PRI FLOAT-3 16"
SEC FLOAT-1 4"

MODEL 4175
FLOAT LEVEL SETTING
PRI FLOAT-3 16"
SEC FLOAT-13 64"

CAUTION: DO NOT EXERT PRESSURE ON RESILIENT NEEDLE VALVE.

1 FLOAT BOWL INVERTED, WEIGHT OF FLOAT RESTING ON SEATED NEEDLE. MEASURE DISTANCE BETWEEN CENTER SEAM OF FLOAT AND SURFACE OF BOWL DIRECTLY BELOW THE FLOAT.

DRY FLOAT LEVEL ADJUSTMENT
NON ADJ. TYPE NEEDLE & SEAT

FIG. 1

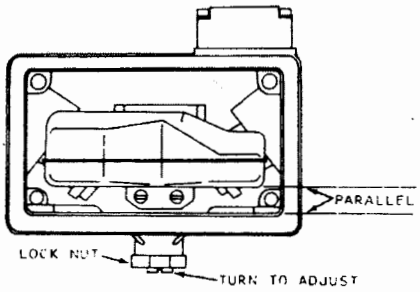

FLOAT BOWL INVERTED, TURN NEEDLE SEAT ASSY. UNTIL FLOAT SURFACE IS PARALLEL WITH THE SURFACE DIRECTLY BELOW THE FLOAT.

DRY FLOAT LEVEL ADJUSTMENT
ADJUSTABLE TYPE NEEDLE & SEAT

FIG. 2

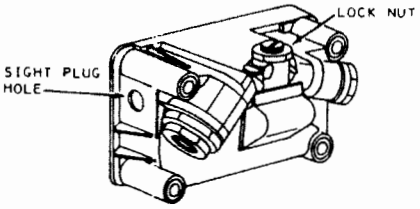

1. CAR SETTING ON LEVEL SURFACE & ENGINE RUNNING.
2. REMOVE SIGHT LEVEL PLUG FROM BOWL.
3. ADJUST NEEDLE SEAT ASSY. SO FUEL LEVEL WILL BE AT BOTTOM EDGE OF SIGHT PLUG HOLE. (PLUS OR MINUS 1/32" TOLERANCE.)
4. TIGHTEN LOCK NUT.

WET FLOAT LEVEL ADJUSTMENT
ADJUSTABLE TYPE NEEDLE & SEAT

FIG. 3

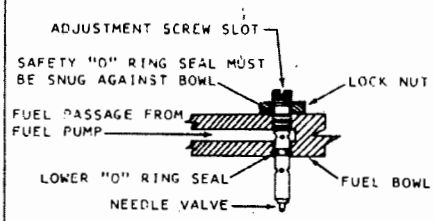

THE EXCLUSIVE SEALING FEATURES OF THIS ASSEMBLY PROVIDE SAFE ADJUSTMENT OF FUEL LEVEL WHILE ENGINE IS RUNNING

SAFETY SEAL ADJUSTABLE FUEL VALVE

FIG. 4

CAM SETTING
BUICK - PRI. NO.1, SEC. NO.1
CHEV., OLD., PONTIAC - PRI. NO.2, SEC. NO.1

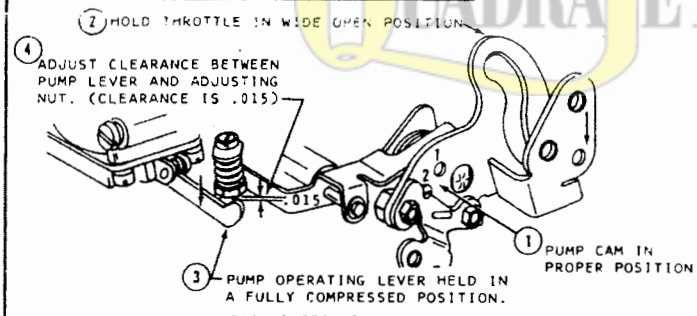

PRI. & SEC. PUMP ADJUSTMENT

FIG. 5

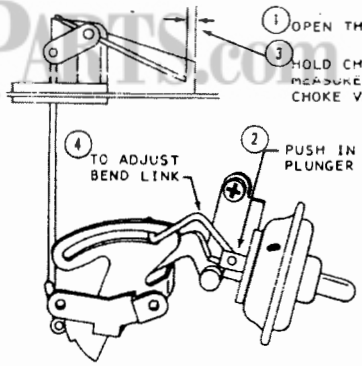

BUICK - 7/64"
CHEV. - 3/32"
OLDS. & PONTIAC - 5/64"

CHOKE QUALIFYING ADJUSTMENT

FIG. 6

ROTATE CHOKE COVER TO ALIGN REFERENCE MARK ON COVER TO SPECIFIED POINT ON CHOKE HOUSING

OLDSMOBILE
CARB. NO. R6497 2-RICH
R6512 1-LEAN

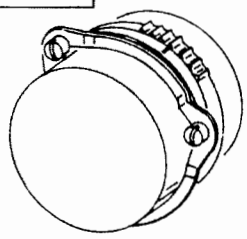

AUTOMATIC CHOKE ADJUSTMENT

FIG. 7

QUADRAJETPARTS.com